Column Sump Pumps

PUMP NO. **FOR:** **CERT. BY:** **DATE:**	**PUMP:** **TDH:** **GPM:** **SIZE & TYPE:**	**MOTOR:** **HP:** **RPM:** **PHASE:** **ENCLOSURE:**	**VOLTS:** **HZ:** **FRAME:**

Pumps

Size & Type	Shaft Group	Dis.	F	H	Vent Size	Min. Sump Dia.	Min. Cover Dia.
228MG-VS	1	1½	6⅝	4⅛	2½	18	20
228MG-VS	1	2	6⅝	4⅛	2½		
236MG-VS	1	1½	6⅝	4⅛	2½		
236MG-VS	1	2	6⅝	4⅛	2½		
328MG-VS	1	3	6⅝	3½	2½		
336MG-VS	1	3	6⅝	3⅜	2½		
428MG-VS	1	4	8⅝	2¾	4	24	27
438MG-VS	2	4	8⅝	4¼	4		
635MG-VS	2	6	9⅛	3⅜	4	30	34

Motors

Single Phase		Three Phase		Motor Frame	C
1750		1750			
½		½		56	12
¾		¾		56	12
1		1		143T	15
		1½		145T	15
1½		2		145T	15
2		3		182T	18½
3		5		184T	18½
5		7½		213T	22
		10		215T	22
		15		254T	25
		20		256T	25
		25		284T	27
		30		286T	27

Square Basin Covers

B Sq. Dia.	A Sq. Cover	E Cover Thick.	Cover Drilling When Specified		
			J	K	L
18	20	5/16	4	7/16	9½
24	27	⅜	4	⅝	12¾
30	34	⅜	4	⅝	16¼
36	40	½	4	⅝	19¼
42	46	½	8	⅝	22¼
48	52	½	8	⅝	25¼

Standard Sump Depth

Sump Depth	No. Int. Brgs. Shaft Group 1	No. Int. Brgs. Shaft Group 2	Sump Depth	No. Int. Brgs. Shaft Group 1	No. Int. Brgs. Shaft Group 2	Sump Depth	No. Int. Brgs. Shaft Group 1	No. Int. Brgs. Shaft Group 2
2'-6"	0	0	6'-0"	1	0	13'-0"	2	2
3'-0"	0	0	7'-0"	1	1	14'-0"	3	2
3'-6"	0	0	8'-0"	1	1	15'-0"	3	3
4'-0"	0	0	9'-0"	1	1	16'-0"	3	3
4'-6"	0	0	10'-0"	2	1	18'-0"	4	3
5'-0"	0	0	11'-0"	2	2	20'-0"	4	3
5'-6"	1	0	12'-0"	2	2			

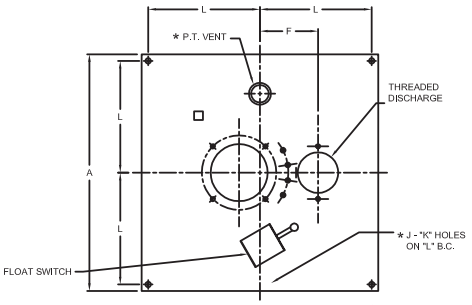

FOR 20" COVERS (228MG, 236MG, 328MG & 336MG)
FOR 20" & 27" COVERS (428MG, 438MG & 635MG)

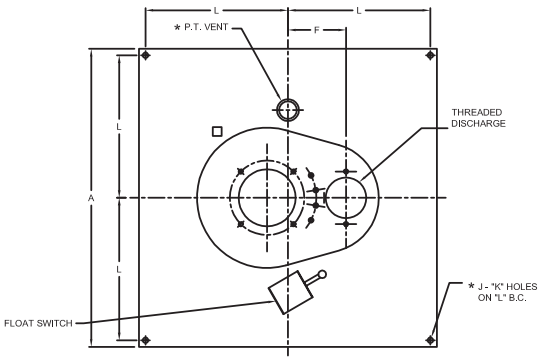

FOR LARGER THAN 20" COVERS (228MG, 236MG, 328MG & 336MG)
FOR LARGER THAN 27" COVERS (428MG, 438MG & 635MG)
WITH AUXILIARY COVERS
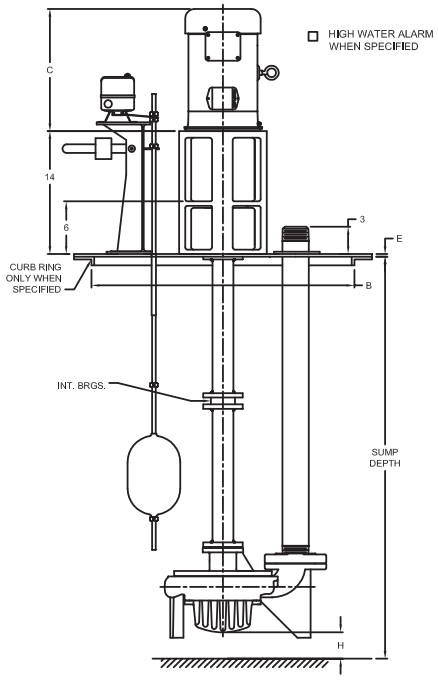
* VENT & COVER DRILLING FOR VAPOR TIGHT CONSTRUCTION ONLY OR WHEN SPECIFIED