SERIES 300

Features & Options

- 3" X 2 1/2" CENTRIFUGAL PUMP
- CLOSE COUPLED TO ELECTRIC MOTOR, PEDESTAL PUMP, OR FOOT MOUNTED FOR BELT OR DIRECT DRIVE
- NEMA JP PUMP MOTOR UP TO 25HP
- FLOWS TO 500 GPM
- PRESSURES TO 190 FEET HEAD
- AVAILABLE IN: CAST IRON AND CAST IRON STAINLESS STEEL FITTED
- IMPELLER—DUCTILE IRON—ENCLOSED
- FASTENERS—STAINLESS STEEL
- SEALS—STANDARD VITON, OPTIONAL SEALS AVAILABLE (CONSULT FACTORY)
- BEARINGS—HEAVY DUTY—OIL OR GREASE LUBRICATED
- SHAFT—STEEL
- SHAFT SLEEVE—316 STAINLESS STEEL
- OPTIONS: —HYDRAULIC DRIVES

DIMENSIONS

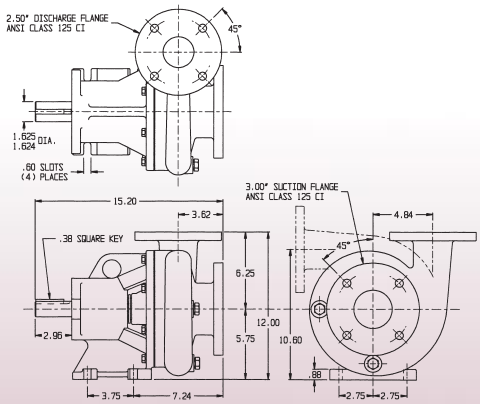

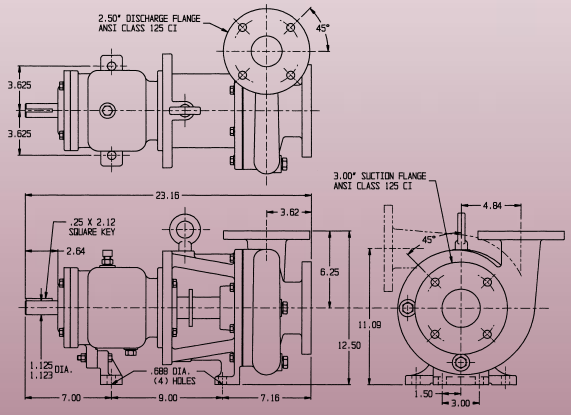

Pump Performance Curves

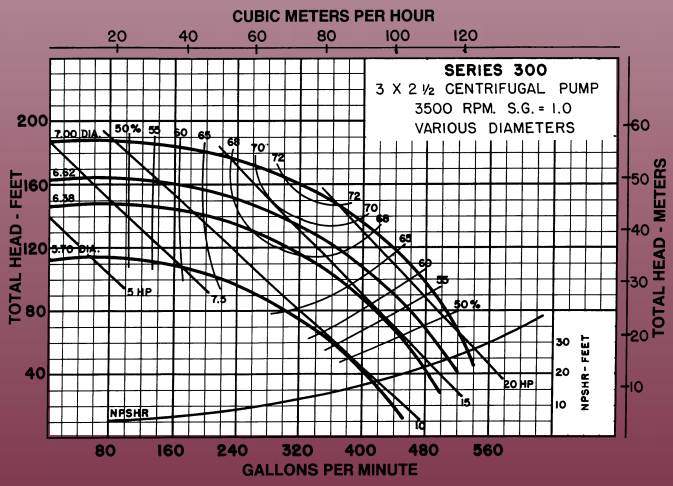

MP PUMPS, INC.
TECUMSEH PRODUCTS COMPANY
(800) 563-8006