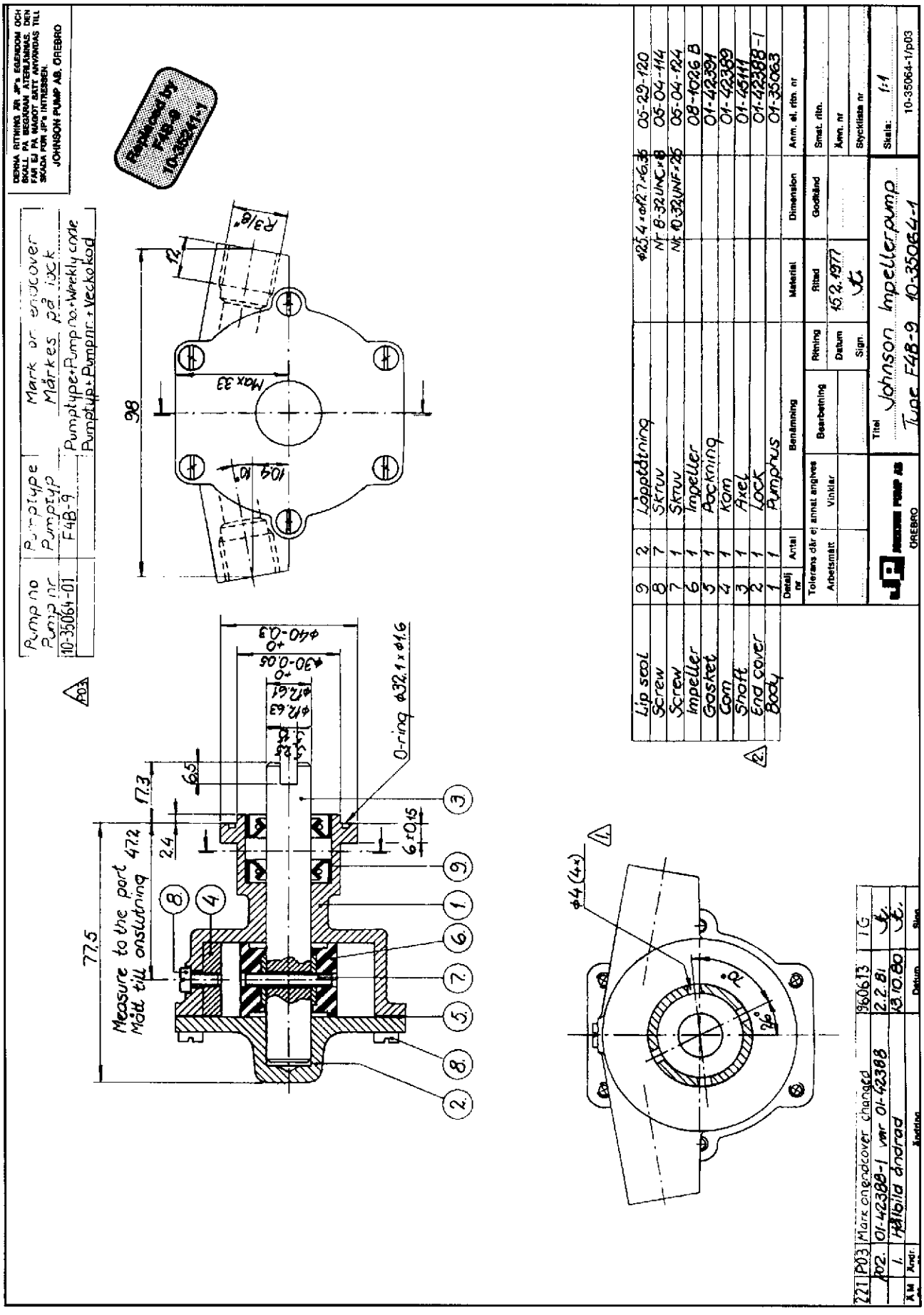article number 10-35064-1 pump F4B-9