JOHNSON PUMP
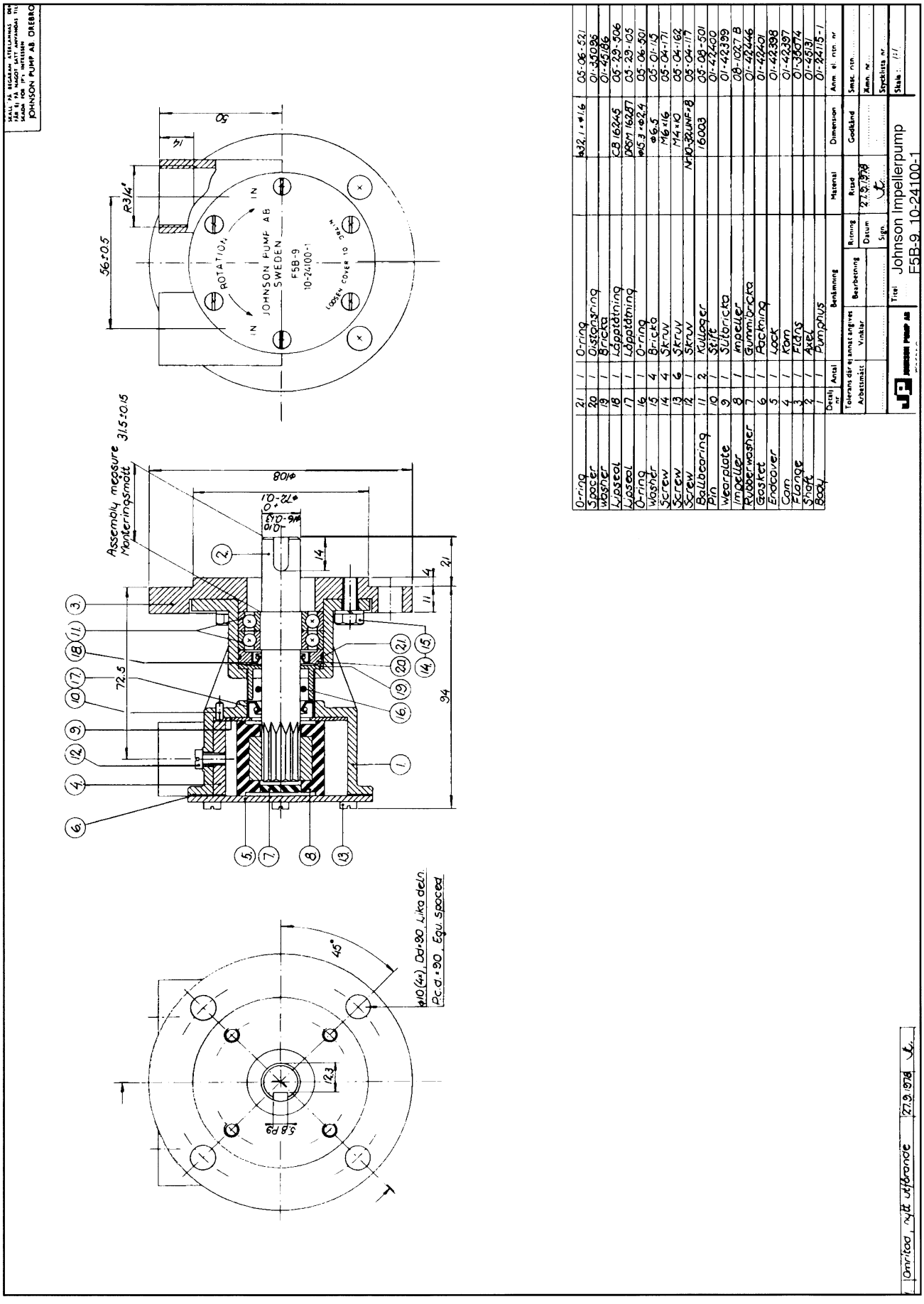
article number 10-24100-1 pump F5B-9