10-24096 pump F8B-9

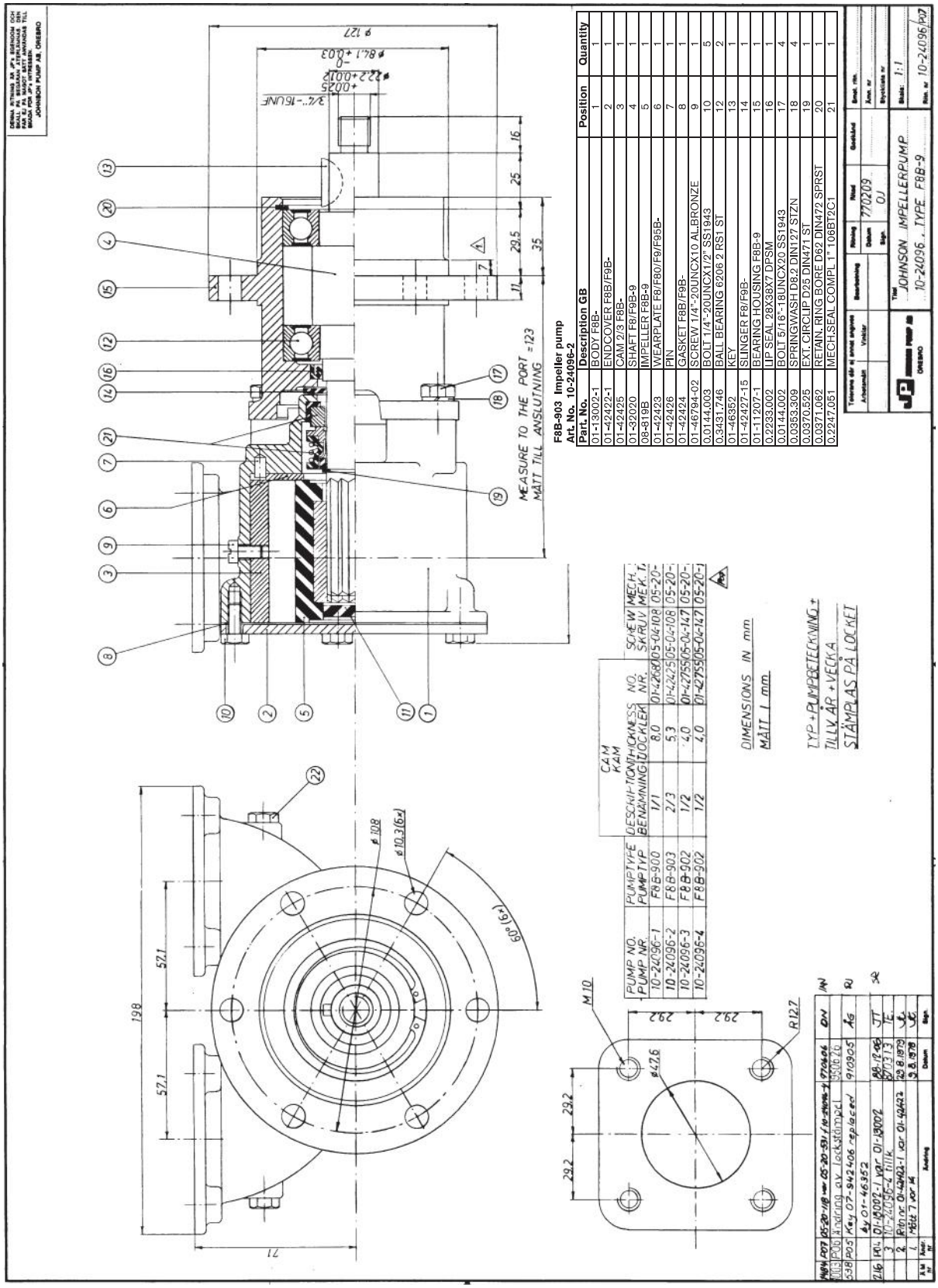

F8B-903 Impeller pump
Art. No. 10-24096-2

Part. No.	Description GB	Position	Quantity
01-13002-1	BODY F8B-	1	1
01-42422-1	ENDCOVER F8B/F9B-	2	1
01-42425	CAM 2/3 F8B-	3	1
01-32020	SHAFT F8/F9B-9	4	1
08-819B	IMPELLER F8B-9	5	1
01-42423	WEARPLATE F8/F80/F9/F95B-	6	1
01-42426	PIN	7	1
01-42424	GASKET F8B/F9B-	8	1
01-46794-02	SCREW 1/4"-20UNCX10 AL.BRONZE	9	1
0.0144.003	BOLT 1/4"-20UNCX1/2" SS1943	10	5
0.3431.746	BALL BEARING 6206 2 RS1 ST	12	2
01-46352	KEY	13	1
01-42427-15	SLINGER F8/F9B-	14	1
01-11207-1	BEARING HOUSING F8B-9	15	1
0.2233.002	LIP SEAL 28X38X7 DPSM	16	1
0.0144.002	BOLT 5/16"-18UNCX20 SS1943	17	4
0.0353.309	SPRINGWASH D8.2 DIN127 SIZN	18	4
0.0370.525	EXT. CIRCLIP D25 DIN471 ST	19	1
0.0371.062	RETAIN. RING BORE D62 DIN472 SPRST	20	1
0.2247.051	MECH.SEAL COMPL.1" 106BT2C1	21	1

PUMP NO. PUMP NR.	PUMPTYPE PUMPTYP	DESCRIP-TION BENÄMNING	CAM KAM THICKNESS TJOCKLEK	NO. NR.	SCREW SKRUV	MECH. MEK. T.
10-24096-1	F8B-900	1/1	8.0	01-42680	05-04108	05-20-
10-24096-2	F8B-903	2/3	5.3	01-42425	05-04108	05-20-
10-24096-3	F8B-902	1/2	4.0	01-42755	05-04147	05-20-
10-24096-4	F8B-902	1/2	4.0	01-42755	05-04147	05-20-1

The product, i.e. concept, design and construction, is the property of SPX Johnson Pump Marine AB