JOHNSON PUMP

# article number 10-24076-1 pump F5B-9

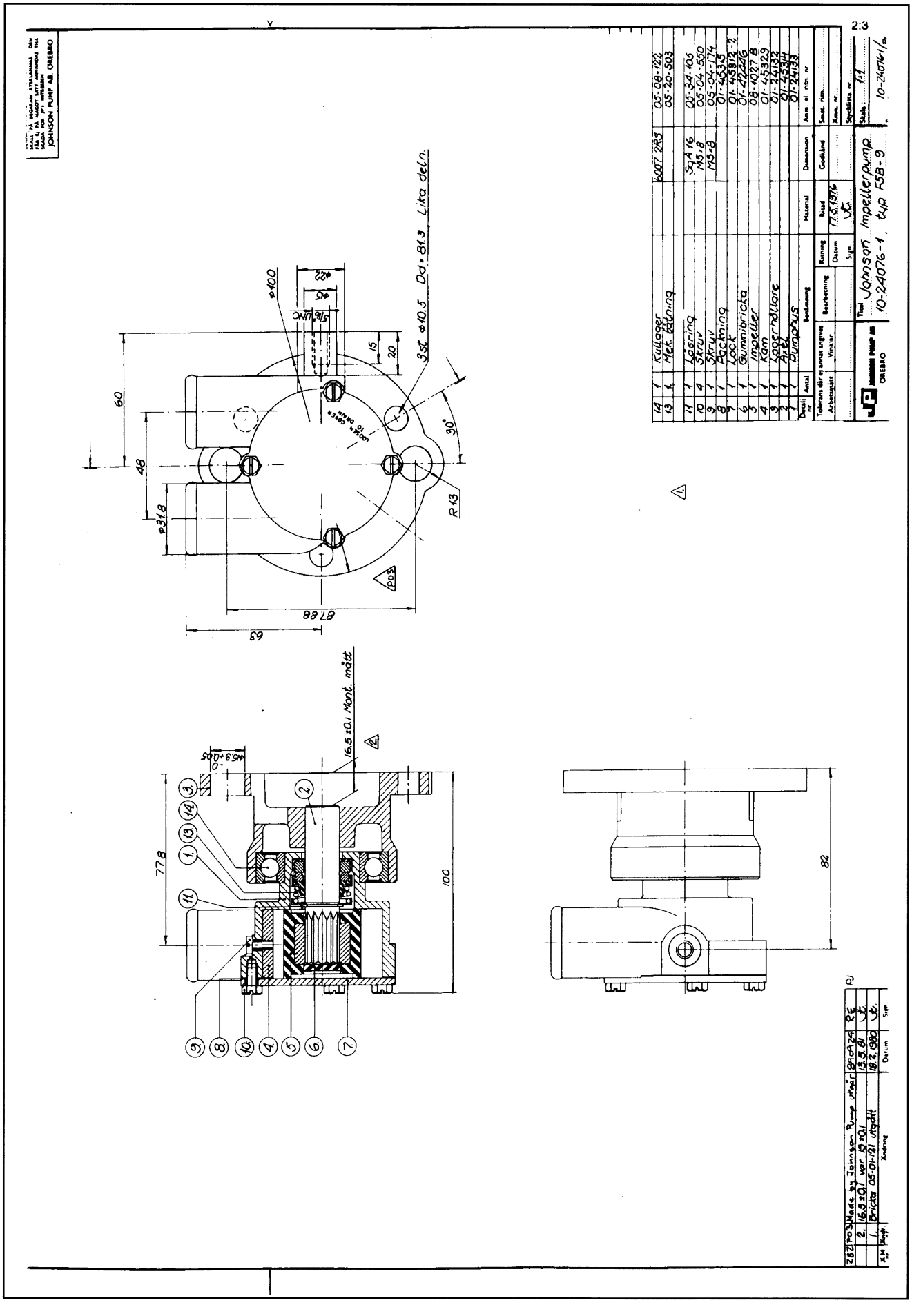




The product, i.e. concept, design and construction, is the property of Johnson Pump AB