10-13333 pump F6B-9

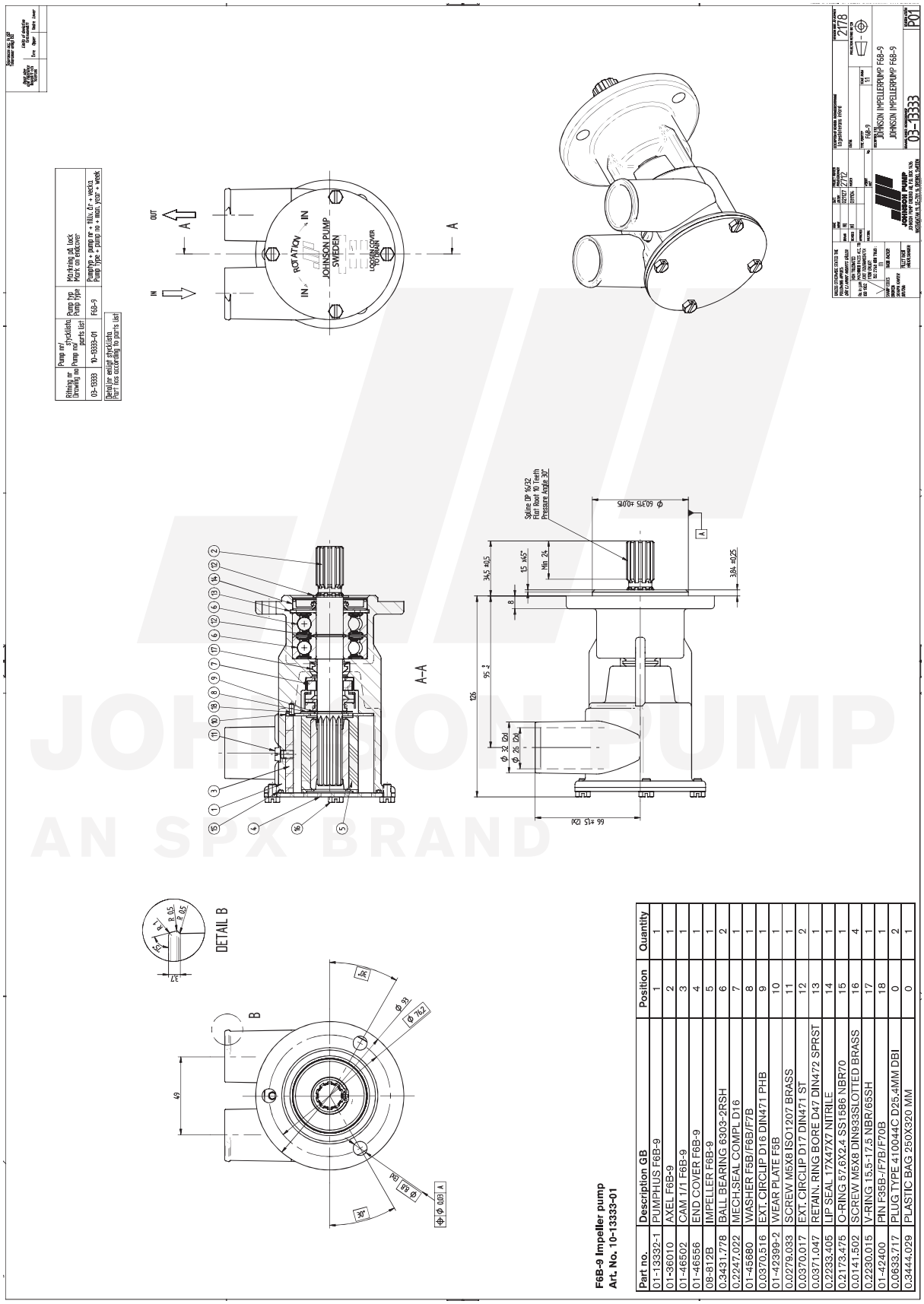

F6B-9 Impeller pump
Art. No. 10-13333-01

Part no.	Description GB	Position	Quantity
01-133332-1	PUMPHUS F6B-9	1	1
01-36010	AXEL F6B-9	2	1
01-46502	CAM 1/1 F6B-9	3	1
01-46556	END COVER F6B-9	4	1
08-812B	IMPELLER F6B-9	5	1
0.3431.77B	BALL BEARING 6303-2RSH	6	2
0.2247.022	MECH.SEAL COMPL D16	7	1
01-45680	WASHER F5B/F6B/F7B	8	1
0.0370.516	EXT. CIRCLIP D16 DIN471 PHB	9	1
01-42399-2	WEAR PLATE F5B	10	1
0.0279.033	SCREW M5X8 ISO1207 BRASS	11	1
0.0370.017	EXT. CIRCLIP D17 DIN471 ST	12	2
0.0371.047	RETAIN. RING BORE D47 DIN472 SPRST	13	1
0.2233.405	LIP SEAL 17X47X7 NITRILE	14	1
0.2173.475	O-RING 57.6X2.4 SS1586 NBR70	15	1
0.0141.502	SCREW M5X8 DIN933SLOTTED BRASS	16	4
0.2230.015	V-RING 15.5-17.5 NBR/65SH	17	1
01-42400	PIN F35B-/F7B/F70B	18	1
0.0633.717	PLUG TYPE 410044C D25.4MM DBI	0	2
0.3444.029	PLASTIC BAG 250X320 MM	0	1

The product, i.e. concept, design and construction, is the property of SPX Johnson Pump Marine AB