# article number 10-13025 pump F8B-5000

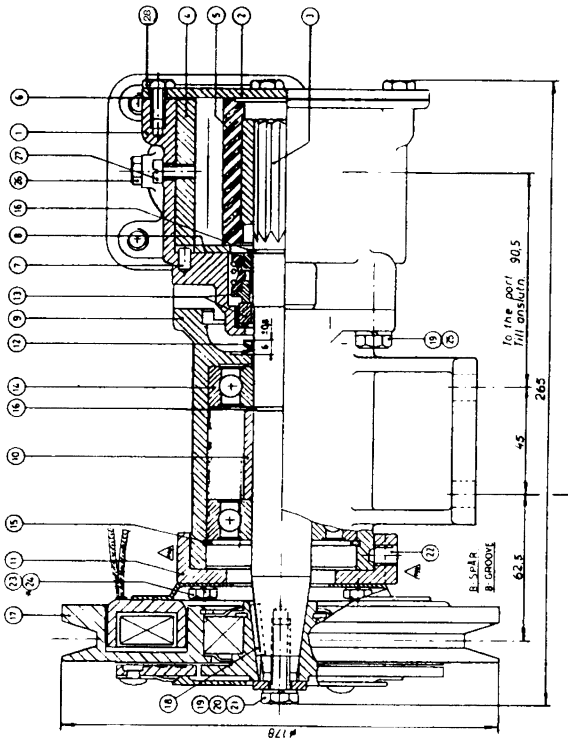


| Pos. | Qty | Description | Beskrivning | Material | Dimension | Drawing no. |
|---|---|---|---|---|---|---|
| 26* | 5 | Screw | Skruv | | | 05-04-46 |
| 27 | 1 | Screw | Skruv | | See drawing | 02-35170 |
| 26 | 2 | Plug | Plugg | | | 05-03-122 |
| 25 | 4 | Screw | Skruv | | | 05-04-128 |
| 24 | 3 | Screw | Skruv | | | 05-04-158 |
| 23 | 3 | Washer | Bricka | | | 05-01-115 |
| 22 | 3 | Screw | Skruv | | | 05-04-139 |
| 21 | 1 | Screw | Skruv | | | 05-04-150 |
| 20 | 1 | Washer | Bricka | | | 05-01-529 |
| 19 | 5 | Washer | Bricka | | | 05-02-101 |
| 18 | 1 | Key | Kil | | | 05-03-121 |
| 17 | 1 | Clutch | Koppling | | See drawing | 02-35170 |
| 16* | 2 | Retaining ring | Låsring | | | 05-34-108 |
| 15 | 1 | Retaining ring | Låsring | | | 05-34-118 |
| 14 | 2 | Ball bearing | Kullager | | | 05-08-504 |
| 13* | 1 | Mech. seal | Mek. tätning | | | 05-20-118 |
| 12 | 1 | V-ring | V-ring | | | 05-19-505 |
| 11 | 1 | Retaining ring | Fästring | | | 01-35144-2 |
| 10 | 1 | Spacer | Distansring | | | 01-42747 |
| 9 | 1 | Pedestal | Lagerfot | | | 01-13020 |
| 8 | 1 | Wear plate | Slitbricka | | | 01-42423 |
| 7 | 1 | Pin | Stift | | | 01-42426 |
| 6* | 1 | Gasket | Packning | | | 01-42424 |
| 5* | 1 | Impeller | Impeller | | See drawing | 02-35170 |
| 4 | 1 | Cam | Kam | | See drawing | 02-35170 |
| 3 | 1 | Shaft | Axel | | | 01-35138 |
| 2 | 1 | End cover | Lock | | | 01-42422-1 |
| 1 | 1 | Body | Pumphus | | | 01-11206 |

*Det. no. 24 (3x) to be locked with a tightening moment of 7±1 Nm

*Det. nr 24 (3x) låses med ett åtdragningsmoment, 7±1 Nm

Johnson Impellerpump F8B-5000

Drawing 10-13025

Date 81-03-16

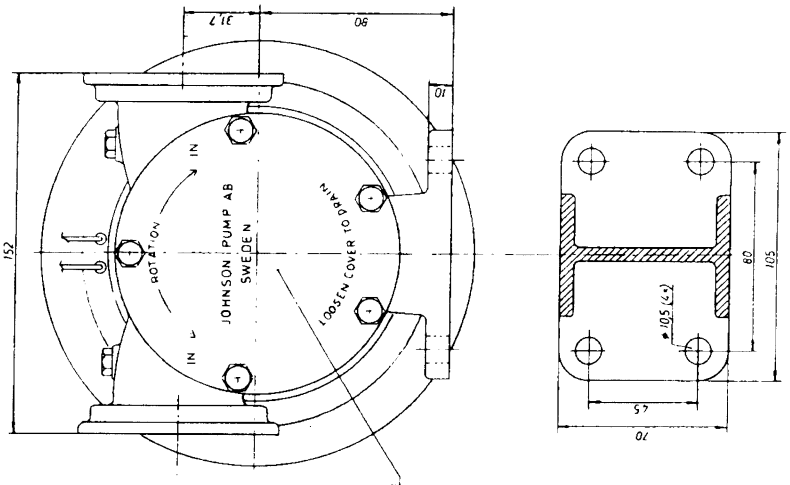


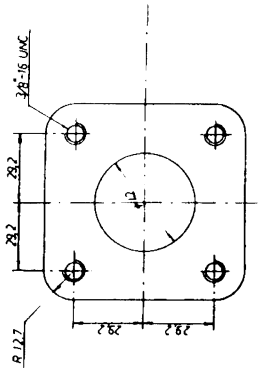


Pumpsläp som Pumpbeteckning, stämplas på locket



The product, i.e. concept, design and construction, is the property of Johnson Pump AB