Jabsco 28630 SERIES

EXPLODED VIEW

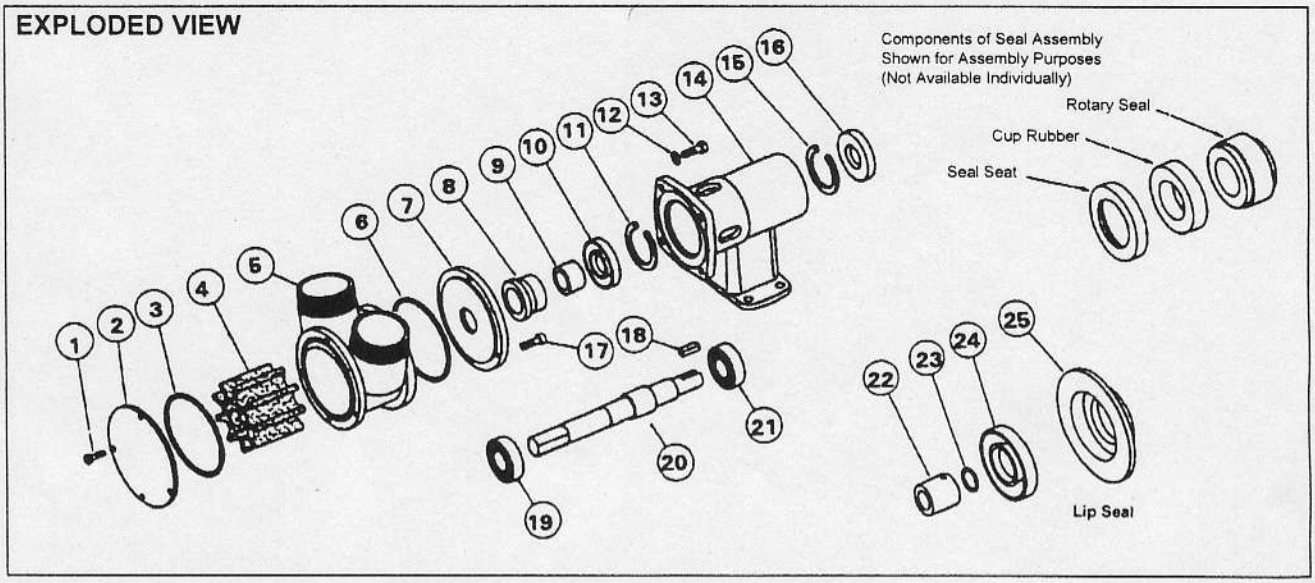

PARTS LIST			MODEL NUMBER WITH APPROPRIATE SEAL OPTIONS		
			Std. Mech.	H/F Mech.	Lip Type
Key	Description	Qty	28630-2125	28630-2225	28630-2425
1	Screw	4	X3001-209F	X3001-209F	X3001-209F
2	Endcover	1	23975-0000	23975-0000	23975-0000
3	"O" Ring*	1	SP2000-1213	SP2000-1213	SP2000-1213
4	Impeller*	1	21899-0005B	21899-0005B	21899-0005B
5	Body	1	23974-2000	23974-2000	23974-2000
6	"O" Ring*	1	SP2000-1213	SP2000-1213	SP2000-1213
7	Wearplate	1	28635-0000	28635-0000	See Below
8	Seal Assembly*	1	22644-6000	22644-6200	See Below
9	Spacer	1	28638-0000	28638-0000	28638-0000
10	Seal	1	SP2701-0912	SP2701-0912	SP2701-0912
11	Retaining Ring	1	SP1701-437	SP1701-437	SP1701-437
12	Washer	4	X3080-101F	X3080-101F	X3080-101F
13	Screw	4	X3001-209F	X3001-209F	X3001-209F
14	Bearing Housing	1	28503-0000	28503-0000	28503-0000
15	Retaining Ring	1	SP1701-437	SP1701-437	SP1701-437
16	Seal	1	SP2701-0930	SP2701-0930	SP2701-0930
17	Screw	4	X3007-209F	X3007-209F	X3007-209F
18	Key	1	X4000-487A	X4000-487A	X4000-487A
19	Bearing	1	SP2601-23	SP2601-23	SP2601-23
20	Shaft	1	28607-0000	28607-0000	28607-0000
21	Bearing	1	SP2601-0460	SP2601-0460	SP2601-0460
Lip Seal Kit No. & Contains			-	-	28631-0403B
22	Seal Spacer	1	-	-	PART NUMBERS AVAILABLE ON REQUEST
23	"O" Ring*	1	-	-	
24	Seal*	1	-	-	
25	Wearplate	1	-	-	
Service Kit Contains*			SK315	SK315-0225	SK315-0425

INSTALLATION DRAWING

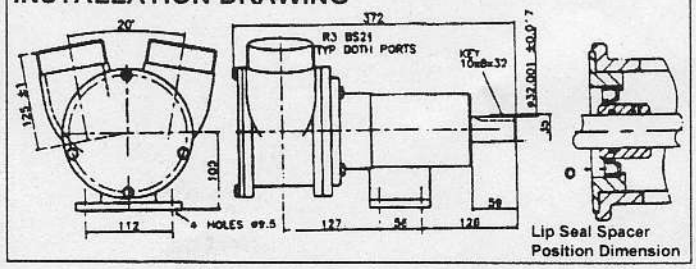

SERVICE INSTRUCTIONS

Dis-Assembly

1. Remove screws (1), endcover and "O" ring (3). Remove screws (13) and washers (12) and then slide off body complete with impeller and wearplate.
2. Remove seal seat and cup rubber from wearplate and then remove screws (17) and push out impeller and "O" ring (6).
3. Gently lever the seal spacer (9) and rotary seal off the shaft.
4. Prise out seal (16) and remove retaining ring (15) and carefully withdraw the shaft and bearing assembly. Remove retaining ring (11) and push out seal (10).
5. To remove bearings from shaft an arbor press is required, alternatively a bearing extractor may be used. Support inner race of bearing and apply a steady pressure on the shaft until bearing is free. Repeat this procedure to remove the other bearing.

Pumps with Lip Seal:- Push out lip seal (24) from wearplate (25). Loosen set screw to remove seal spacer (22) from the shaft. Prise out "O" ring (23) from seal spacer.

Assembly

1. To fit bearings onto shaft:- Support inner race of bearing and press shaft until bearing locates against the shoulder. Repeat this procedure for other bearing.
2. Fit retaining ring (11) and lip seal (10) ensuring that the spring on seal is facing outwards.
3. Fill the bearings with grease, and the space between the bearings until two thirds full. Smear grease on the shaft where the lip seal locates. Push shaft and bearing assembly into bearing housing. Fit retaining ring (15) and seal (16) with spring facing outwards.
4. **To fit seal:-** Smear shaft with lubricating oil and slide seal spacer (9) up to the shoulder on shaft. Push rotary seal gently until it touches the spacer. Fit cup rubber and seal into the wearplate (17).
5. Fit impeller into lubricated body with a twisting motion in the same rotation as motor. Fit "O" ring (6) into body and then fit wearplate assembly over body and secure with screws (17).
6. Slide body assembly over the shaft and secure to bearing housing with screws (13) and washers (12). Do not overtighten. All these and endcover screws should be tightened to a torque of 13.5 Nm.
7. Fit "O" ring (3) into body and place endcover over body then secure with screws (1).

Pumps with lip Seal:- Ensure that the "O" ring (23) is fitted under seal spacer (22). Smear seal spacer and shaft with lubricating oil. Slide spacer over shaft and secure with set screw to dimension shown i.e. flush with the wearplate. Press lip seal (24) into wearplate (25). Then follow on from step (5) above.

Inspect all parts for wear or damage and replace if necessary.