REVISIONS				
REV	DESCRIPTION	DATE	ECO	DWN

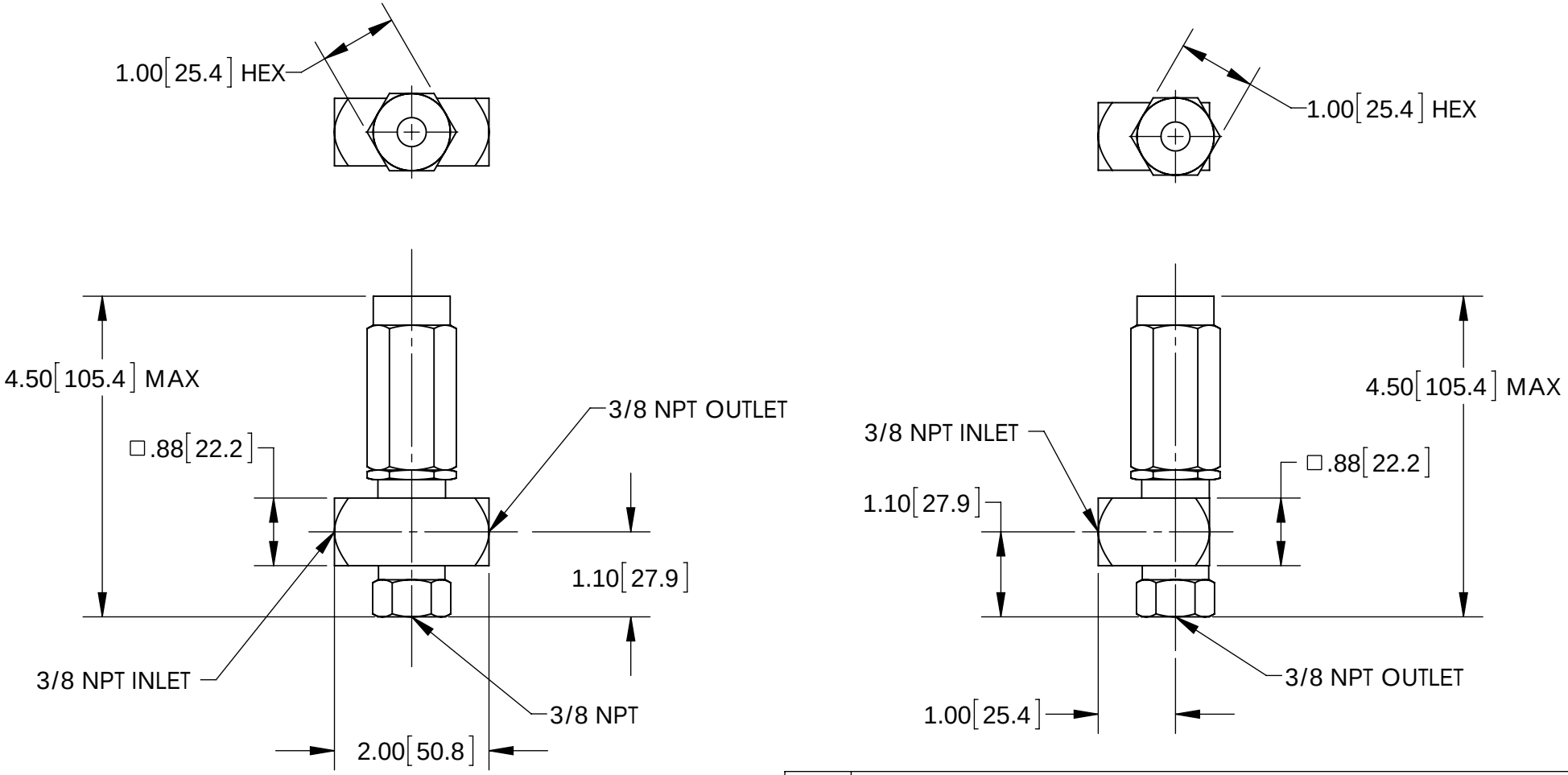

MAT'L

PROPRIETARY STATEMENT:

THIS DOCUMENT CONTAINS CONFIDENTIAL AND PROPRIETARY INFORMATION AND IS NOT TO BE REPRODUCED OR THE INFORMATION CONTAINED THEREIN DISCLOSED TO OTHERS WITHOUT CONSENT, IN WRITING, FROM WANNER ENGINEERING, INC.

UNLESS OTHERWISE SPECIFIED:

-DIMENSIONS ARE IN INCHES.
-INTERPRET DRAWING PER ASME Y14.5-2009.
-DIMENSIONS ARE AFTER PLATING,COATING AND HEAT TREATING, BUT BEFORE PAINTING.
-REMOVE ALL BURRS AND SHARP CORNERS.

TOLERANCES:
.X = ± .1
.XX = ± .02
.XXX = ± .005
ANGLES = ±1°
FINISH: 125

DWN
CHK'D
THIRD ANGLE PROJECTION
DO NOT SCALE DRAWING
SHEET 1 OF 1
SCALE: 1:2 FORM: ABLK

WANNER ENGINEERING INC
1204 CHESTNUT AVE MINNEAPOLIS MN 55403

TITLE

SIZE A

DWG NO C46 INLINE/OFFLINE

REV