xylem
Let's Solve Water

TECHNICAL BROCHURE
BAQUAeAB2 R8

** Available up to 100 GPM systems*

AQUAVAR® e-AB2

VARIABLE SPEED CONSTANT PRESSURE SYSTEMS

- 3 HP and 5HP Pressure Booster Packages

GOULDS
WATER TECHNOLOGY
a xylem brand

FEATURES

The e-AB2 variable speed pump controller and complete booster package kits, provide an economical answer for municipal water district customers with low water pressure. Both domestic and light commercial applications can benefit. As water use increases, the controller changes pump speed to maintain pressure. Large supply tanks are eliminated and less wear and tear on your pump and motor.

Think of it as "Cruise Control" for your pump! The e-AB2 is available with a range of flow rates to handle homes with up to four baths, irrigation, filtration and fire suppression systems. Light commercial applications up to 100 GPM at 55 PSI boost. The e-AB2 is available as either a separate controller or as part of a complete pump package with everything you need to plumb it to a domestic water line.

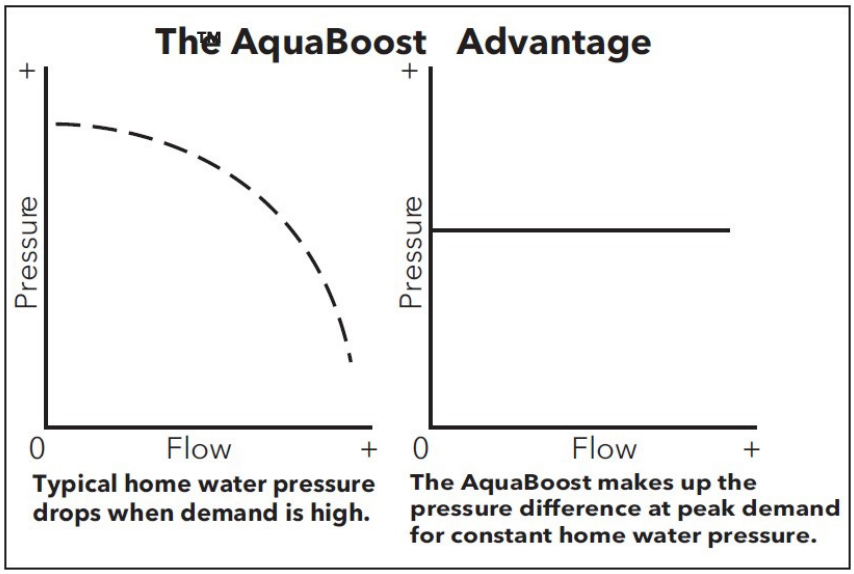

3 HP and 5 HP Controller

AQUAVAR IPC CONTROLLER PROVIDES CONSTANT PRESSURE CONTROL PLUS MORE FOR THE 3 HP AND 5 HP MOTOR SIZES (REPLACES 3AB2 AND 5AB2 CONTROLLER)

FEATURES

- Programmed to motor electrical characteristics; just select set pressure.
- Application specific *"Start-Up Genie"* guides you through quick and easy commissioning
- Removable, graphical control panel with display
- Alarm Log records the last 5 alarms
- Hand on, Auto on, and Off buttons for easy pump operation at the keypad – No toggling between local and remote operation!
- Capable of controlling up to 2 fixed speed pumps, with one standard drive
- Duplex variable speed pumping control with auto lead/lag and alternate

e-AB2 HYDRAULIC SELECTION (e-HM and MCS)

FEET	PSI BOOST	GPM								
		20	30	40	50	60	70	80	90	100
46	**20**								5	5
58	**25**							5	5	5
69	**30**					5	5	5	5	5
81	**35**					5	5	5	5	5
92	**40**			2	2	5	5	5	5	5
104	**45**			2	2	5	5	5	5	5
116	**50**			2	2	5	5	5	5	6
127	**55**			2	2	5	5	6	6	6
139	**60**			3	3	6	6	6	6	
150	**65**			3	3	6	6	6		
162	**70**			3	3	6	6	6		
173	**75**	1	1	3	3	4				
185	**80**	1	1	3	4	4				

e-AB2 CONFIGURATIONS (e-HM and MCS)

Selection	Part Number	Description
1	3AVN35HM07	230V 3HP 1" disch, 1.25" suct IPC-N3R
	3AVN15HM07	230V 3HP 1" disch, 1.25" suct IPC-N1
2	3AVN310HM03	230V 3HP 1.25" disch, 1.5" suct IPC-N3R
	3AVN110HM03	230V 3HP 1.25" disch, 1.5" suct IPC-N1
3	5AVN310HM04	230V 5HP 1.25" disch, 1.5" suct IPC-N3R
	5AVN110HM04	230V 5HP 1.25" disch, 1.5" suct IPC-N1
4	5AVN310HM05	230V 5HP 1.25" disch, 1.5" suct IPC-N3R
	5AVN110HM05	230V 5HP 1.25" disch, 1.5" suct IPC-N1
5	5AVN3125MS1J2B2	230V 5HP 1.25" disch, 1.5" suct IPC-N3R
	5AVN1125MS1J2B2	230v 5HP 1.25" disch, 1.5" suct IPC-N1
6	5AVN315HM03	230V 5HP 1.5" disch, 2" suct IPC-N3R
	5AVN115HM03	230V 5HP 1.5" disch, 2" suct IPC-N1

** Selections do not include tank. Recommend bladder tank, sized to 20% of pump flow (gpm). Pressure Transducer supplied with all configurations.*

NOTE: *PSI is boosting pressure, NOT total system pressure.*

ADDENDUM: e-AB2 WITH HSC SELECTION

PSI	FEET	GPM				
		10	20	30	40	50
60	139				1	
70	162			1		
80	185		1			
90	208					
95	219	1				

	Part Number	Description
1	3AVN1HSC30B	230V 3HP 1" disch, 1.25" suct IPC-N1
	3AVN3HSC30B	230V 3HP 1" disch, 1.25" suct IPC-N3R

NOTES:

- MAWP is 125 PSI; performance per chart accounts for zero lift conditions
- Motors are 230V three-phase, ODP design
- Tank not included and wiring by others; supplied with AQUAVAR IPC drive
- Pressure transducer supplied with all configurations.

INPUT AND OUTPUT POWER (VOLTAGE AND PHASE)

- All require single-phase input power
  - o All will work on 1Ø, 208-230V input power
- All controllers output three-phase, 230 Volt power
- All pumps are equipped with three-phase motors

3AVN35HM07
- 230v SINGLE PHASE INPUT
- 3 HP variable speed controller (AQUAVAR IPC); Nema 3R
- Pump (e-HM 7 stg) and Transducer (included)
- Tank (not included) and wiring (by others)

3AVN15HM07
- 230v SINGLE PHASE INPUT
- 3 HP variable speed controller (AQUAVAR IPC); Nema 1
- Pump (e-HM 7 stg) and Transducer (included)
- Tank (not included) and wiring (by others)

3AVN310HM03
- 230v SINGLE PHASE INPUT
- 3 HP variable speed controller (AQUAVAR IPC); Nema 3R
- Pump (e-HM 3 stg) and Transducer (included)
- Tank (not included) and wiring (by others)

3AVN110HM03
- 230v SINGLE PHASE INPUT
- 3 HP variable speed controller (AQUAVAR IPC); Nema 1
- Pump (e-HM 3 stg) and Transducer (included)
- Tank (not included) and wiring (by others)

5AVN310HM04
- 230v SINGLE PHASE INPUT
- 5 HP variable speed controller (AQUAVAR IPC); Nema 3R
- Pump (e-HM 4 stg) and Transducer (included)
- Tank (not included) and wiring (by others)

5AVN110HM04
- 230v SINGLE PHASE INPUT
- 5 HP variable speed controller (AQUAVAR IPC); Nema 1
- Pump (e-HM 4 stg) and Transducer (included)
- Tank (not included) and wiring (by others)

5AVN310HM05
- 230v SINGLE PHASE INPUT
- 5 HP variable speed controller (AQUAVAR IPC); Nema 3R
- Pump (e-HM 5 stg) and Transducer (included)
- Tank (not included) and wiring (by others)

5AVN110HM05
- 230v SINGLE PHASE INPUT
- 5 HP variable speed controller (AQUAVAR IPC); Nema 1
- Pump (e-HM 5 stg) and Transducer (included)
- Tank (not included) and wiring (by others)

5AVN3125MS1J2B2
- 230v SINGLE PHASE INPUT
- 5 HP variable speed controller (AQUAVAR IPC); Nema 3R
- Pump (MCS) and Transducer (included)
- Tank (not included) and wiring (by others)

5AVN1125MS1J2B2
- 230v SINGLE PHASE INPUT
- 5 HP variable speed controller (AQUAVAR IPC); Nema 1
- Pump (MCS) and Transducer (included)
- Tank (not included) and wiring (by others)

5AVN315HM03
- 230v SINGLE PHASE INPUT
- 5 HP variable speed controller (AQUAVAR IPC); Nema 3R
- Pump (e-HM 3 stg) and Transducer (included)
- Tank (not included) and wiring (by others)

5AVN115HM03
- 230v SINGLE PHASE INPUT
- 5 HP variable speed controller (AQUAVAR IPC); Nema 1
- Pump (e-HM 3 stg) and Transducer (included)
- Tank (not included) and wiring (by others)

CONTROLLERS ONLY

AVA10030C0F0X0X1
- 10.6 Amp, 230v 3HP Nema 3R, transducer & cable
- Single phase Input; Three phase Output

AVA10030A0F0X0X1
- 10.6 Amp, 230v 3HP Nema 1, transducer & cable
- Single phase Input; Three phase Output

AVA10050C0F0X0X1
- 16.7 Amp, 230v 3HP Nema 3R, transducer & cable
- Single phase Input; Three phase Output

AVA10050A0F0X0X1
- 16.7 Amp, 230v 3HP Nema 1, transducer & cable
- Single phase Input; Three phase Output

INPUT AND OUTPUT POWER (VOLTAGE AND PHASE) WITH HSC

- All require single-phase input power
  - o All will work on 1Ø, 208-230V input power
- All controllers output three-phase, 230 Volt power
- All pumps are equipped with three-phase motors

3AVN1HSC20B

- 230V SINGLE PHASE INPUT
- 3 HP variable speed controller (AQUAVAR IPC); Nema 1
- Pump (HSC20B) and Transducer included
- Tank (not included) and wiring (by other)

3AVN3HSC20B

- 230V SINGLE PHASE INPUT
- 3 HP variable speed controller (AQUAVAR IPC); Nema 3R
- Pump (HSC20B) and Transducer included
- Tank (not included) and wiring (by other)

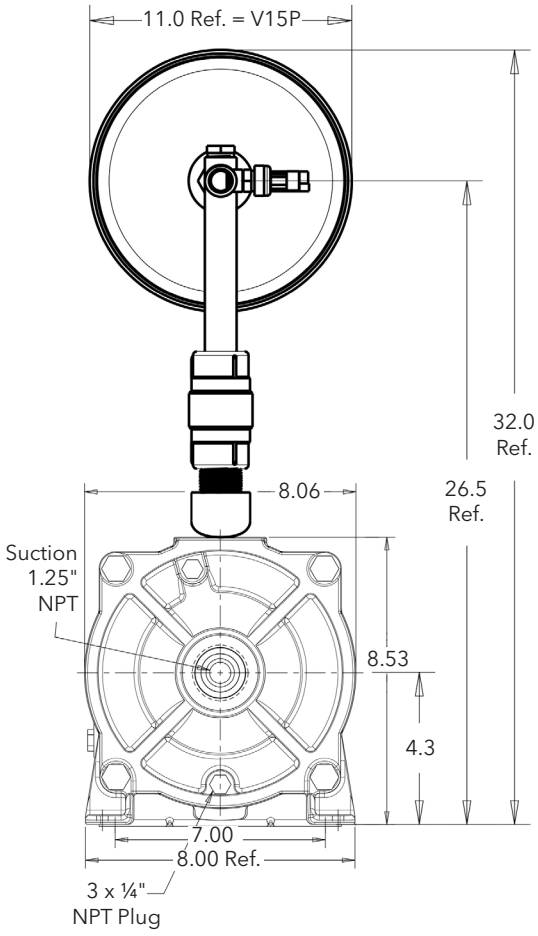

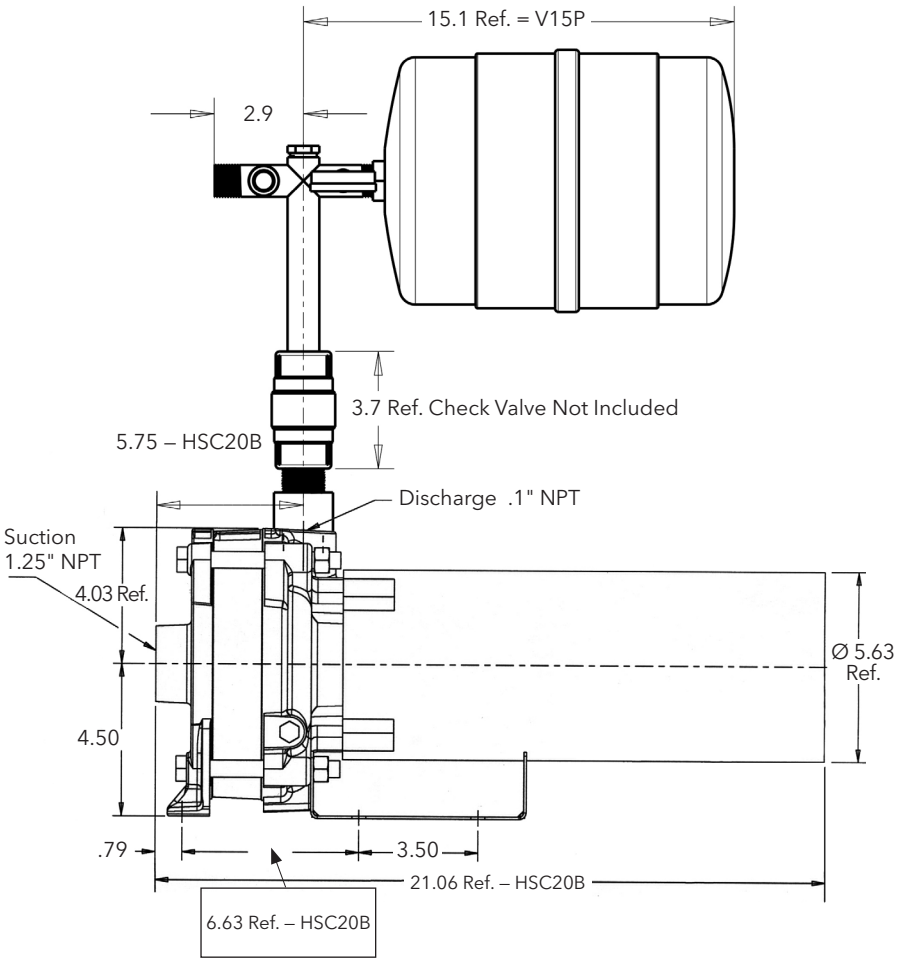

SUGGESTED AB2 INSTALLATION FOR MUNICIPAL WATER SYSTEM

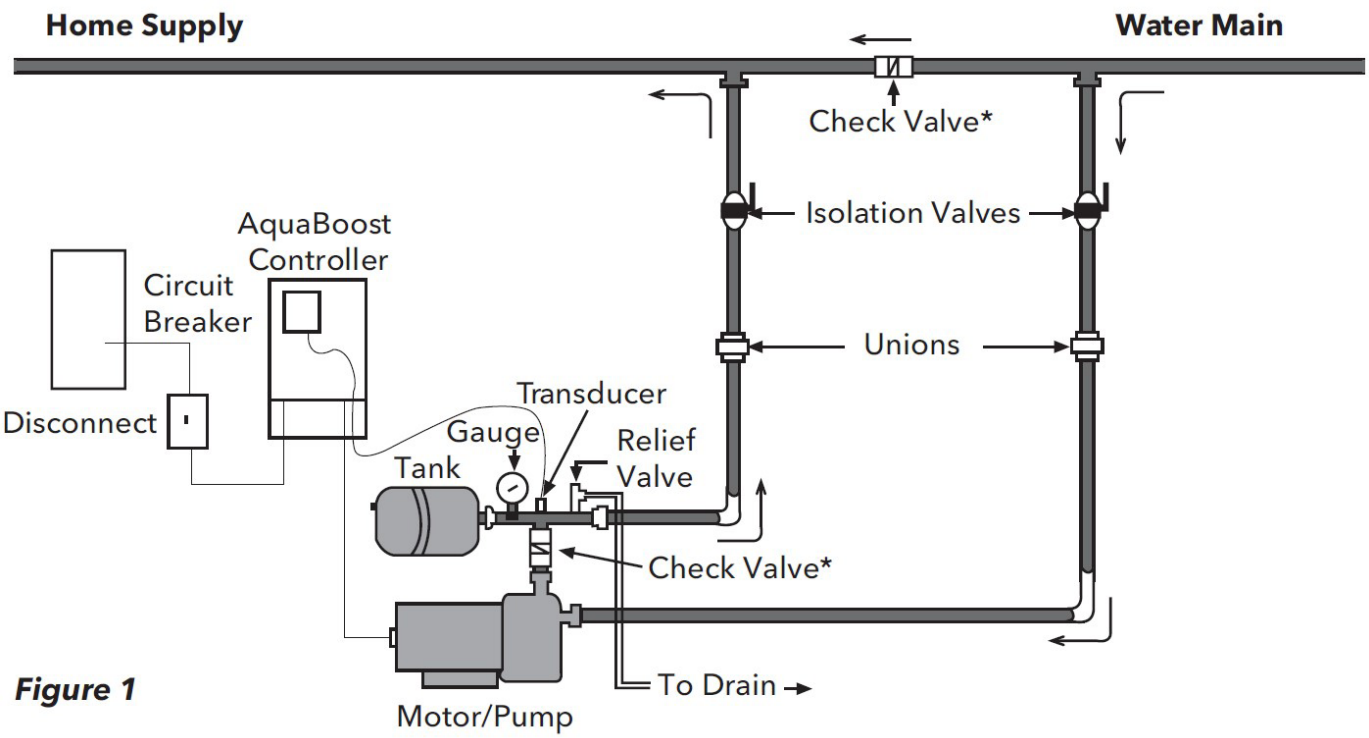

Figure 1

*Spring check valve - provided by installer

SUGGESTED AQUABOOST INSTALLATION FOR WELL PUMP SYSTEM

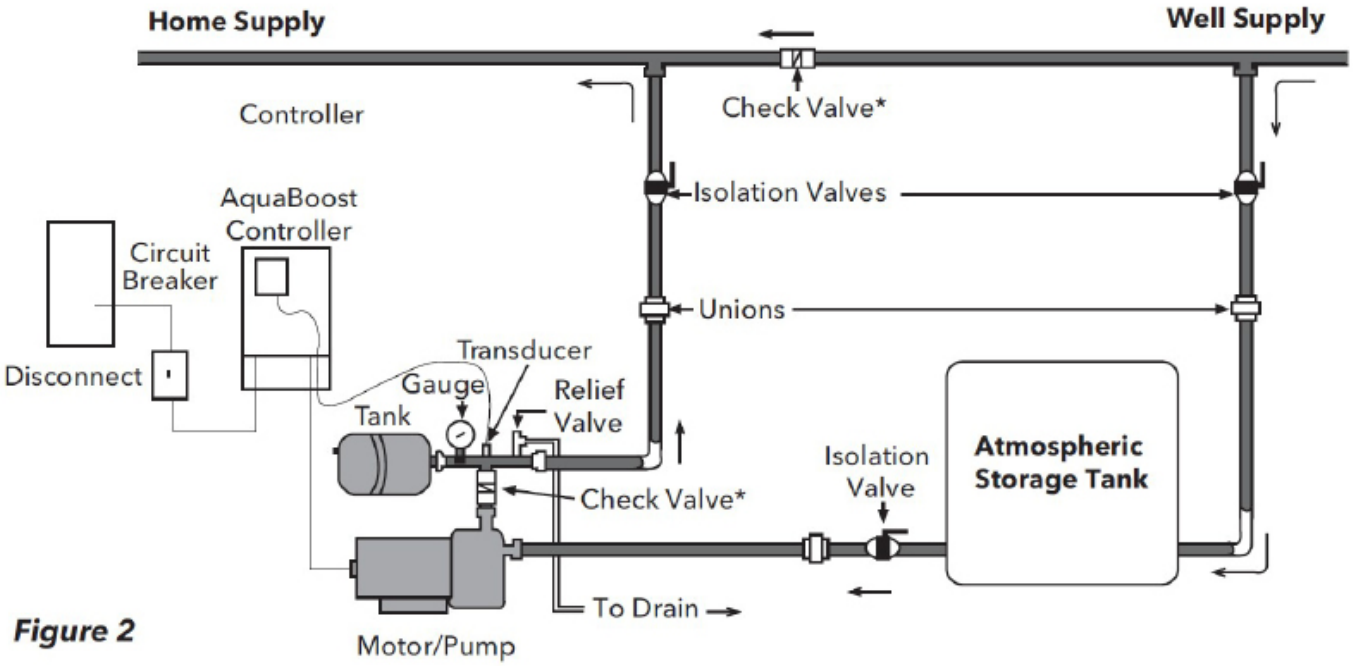

Figure 2

*Spring check valve - provided by installer

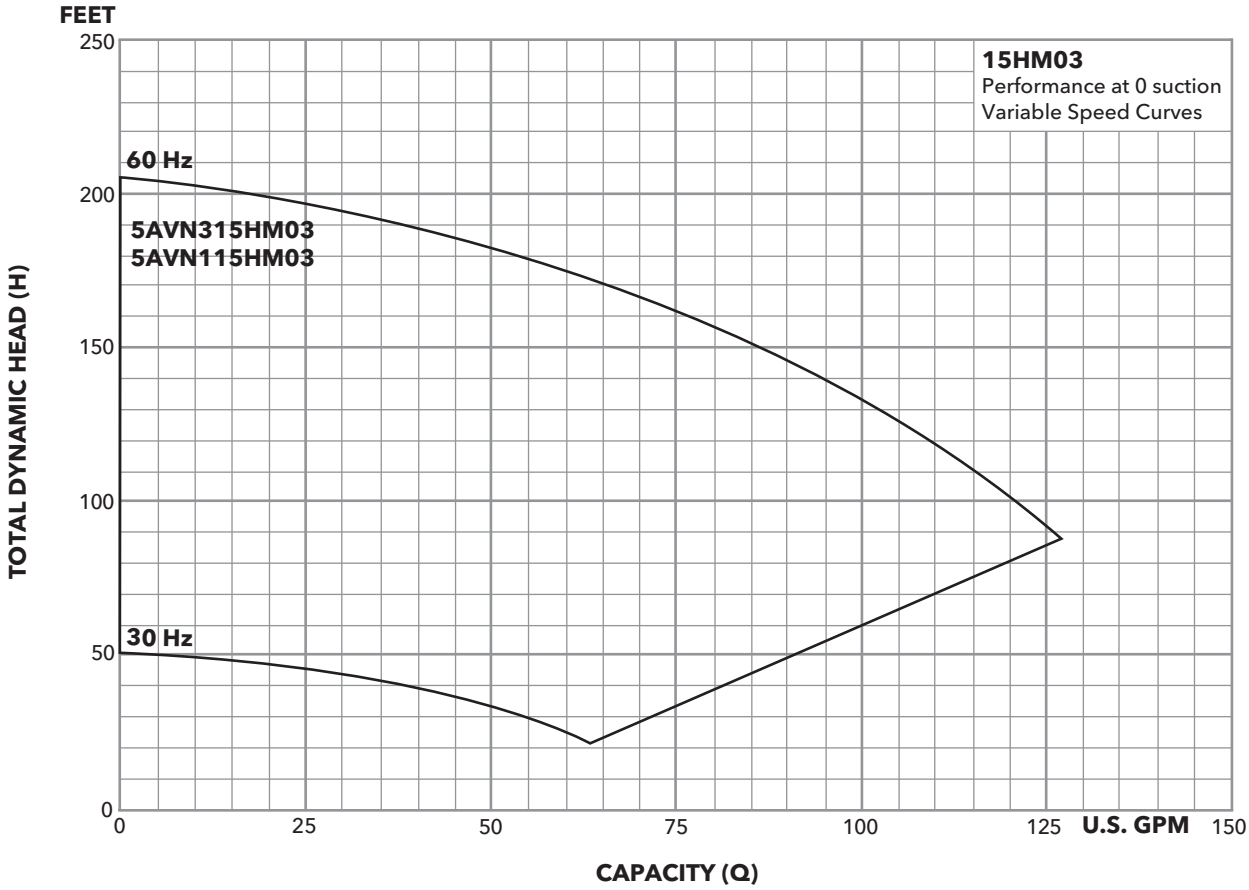
FEET
250
200
150
100
50
0
TOTAL DYNAMIC HEAD (H)
15HM03
Performance at 0 suction
Variable Speed Curves
60 Hz
5AVN315HM03
5AVN115HM03
30 Hz
0
25
50
75
100
125
U.S. GPM
150
CAPACITY (Q)

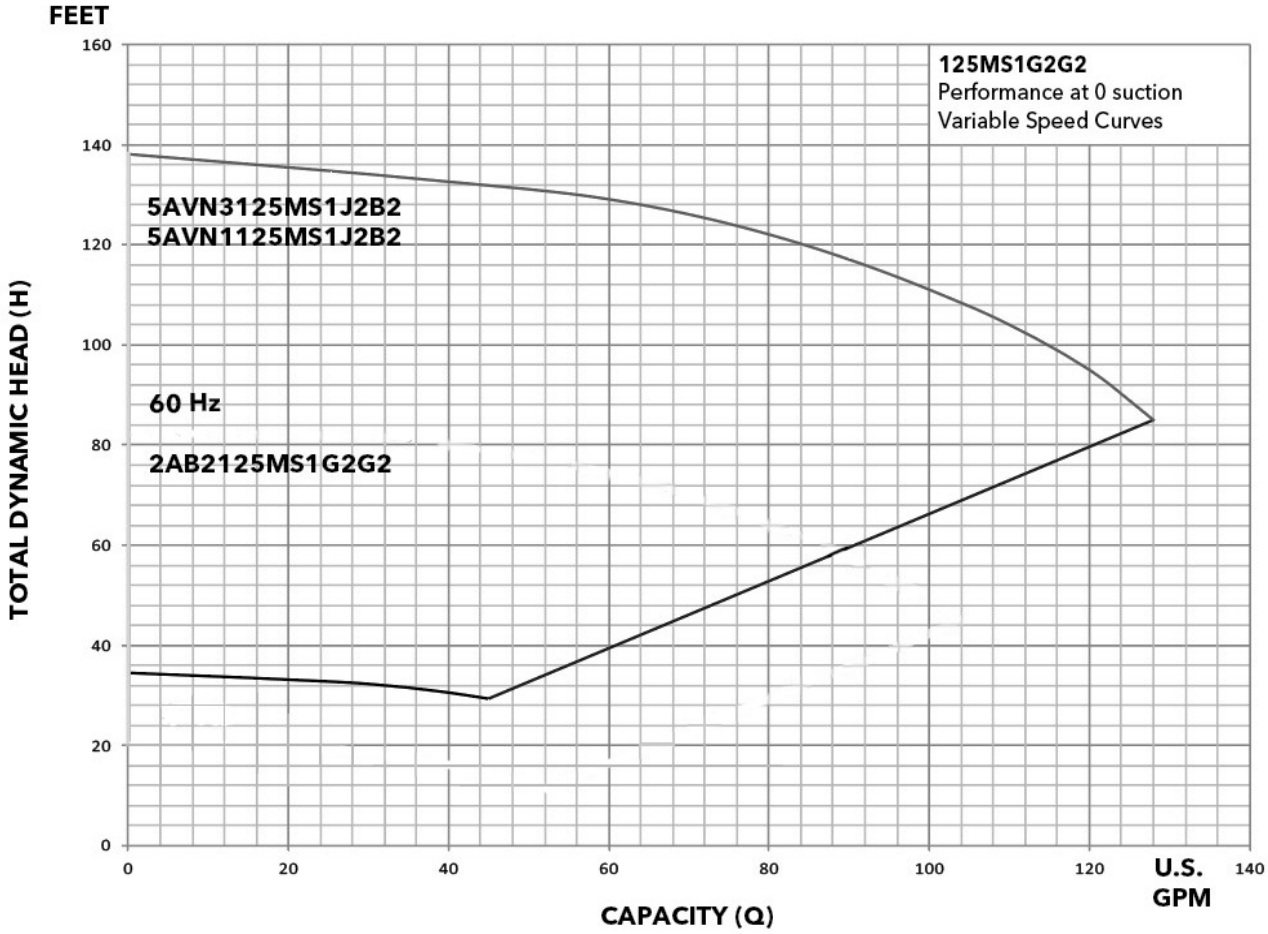
FEET
160
140
120
100
80
60
40
20
0
TOTAL DYNAMIC HEAD (H)
125MS1G2G2
Performance at 0 suction
Variable Speed Curves
5AVN3125MS1J2B2
5AVN1125MS1J2B2
60 Hz
2AB2125MS1G2G2
0
20
40
60
80
100
120
U.S. GPM
140
CAPACITY (Q)

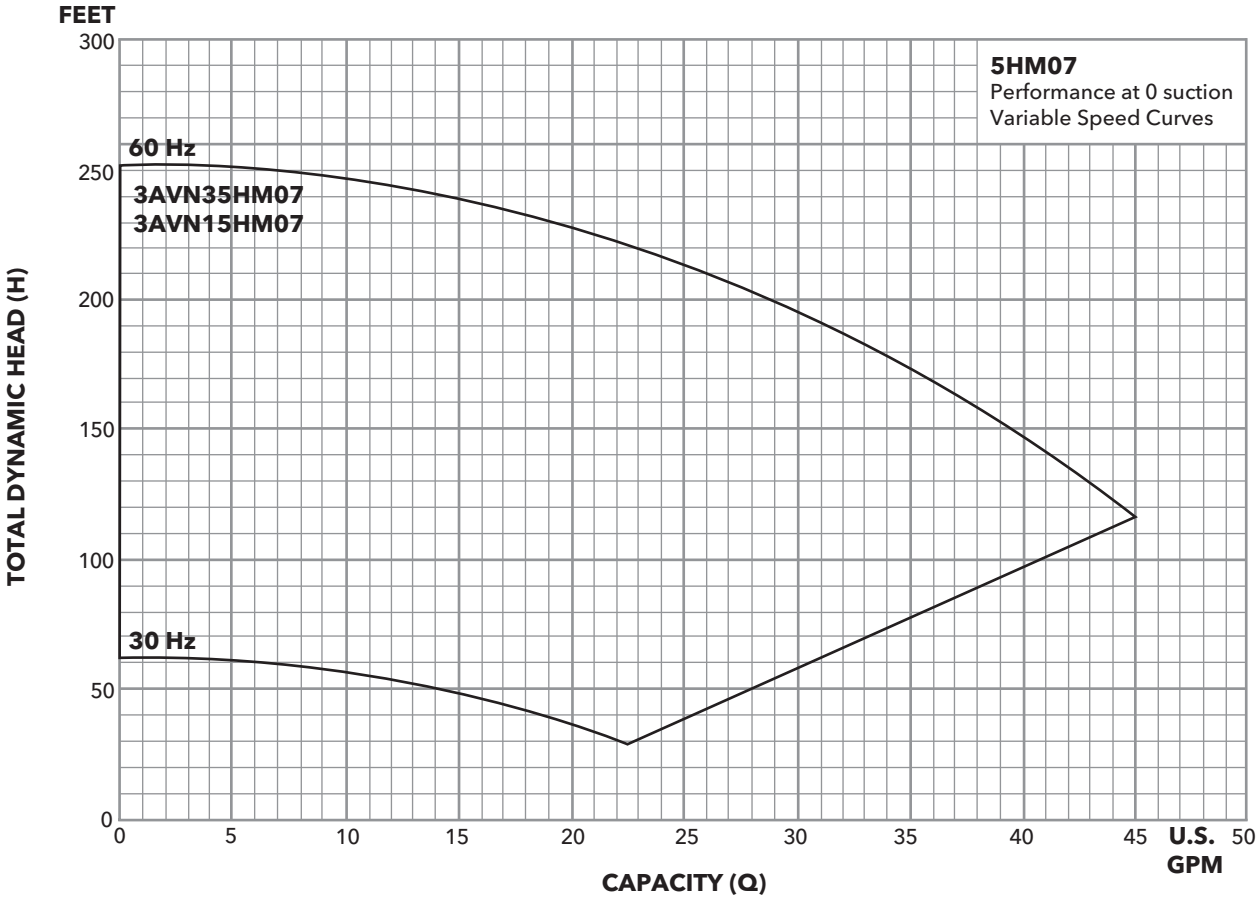
FEET
300
250
200
150
100
50
0
TOTAL DYNAMIC HEAD (H)
5HM07
Performance at 0 suction
Variable Speed Curves
60 Hz
3AVN35HM07
3AVN15HM07
30 Hz
0
5
10
15
20
25
30
35
40
45
U.S. GPM
50
CAPACITY (Q)

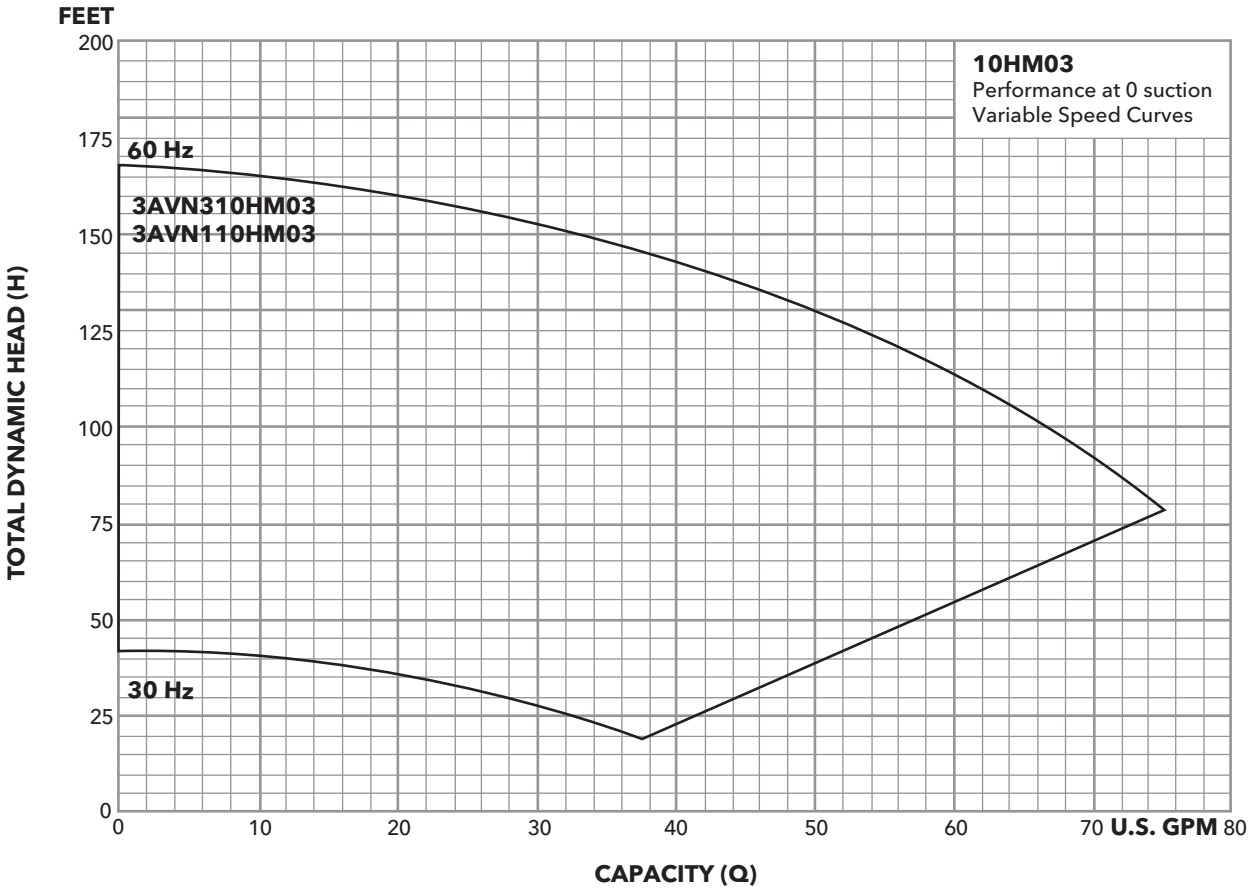
FEET
200
175
150
125
100
75
50
25
0
TOTAL DYNAMIC HEAD (H)
10HM03
Performance at 0 suction
Variable Speed Curves
60 Hz
3AVN310HM03
3AVN110HM03
30 Hz
0
10
20
30
40
50
60
70
U.S. GPM
80
CAPACITY (Q)

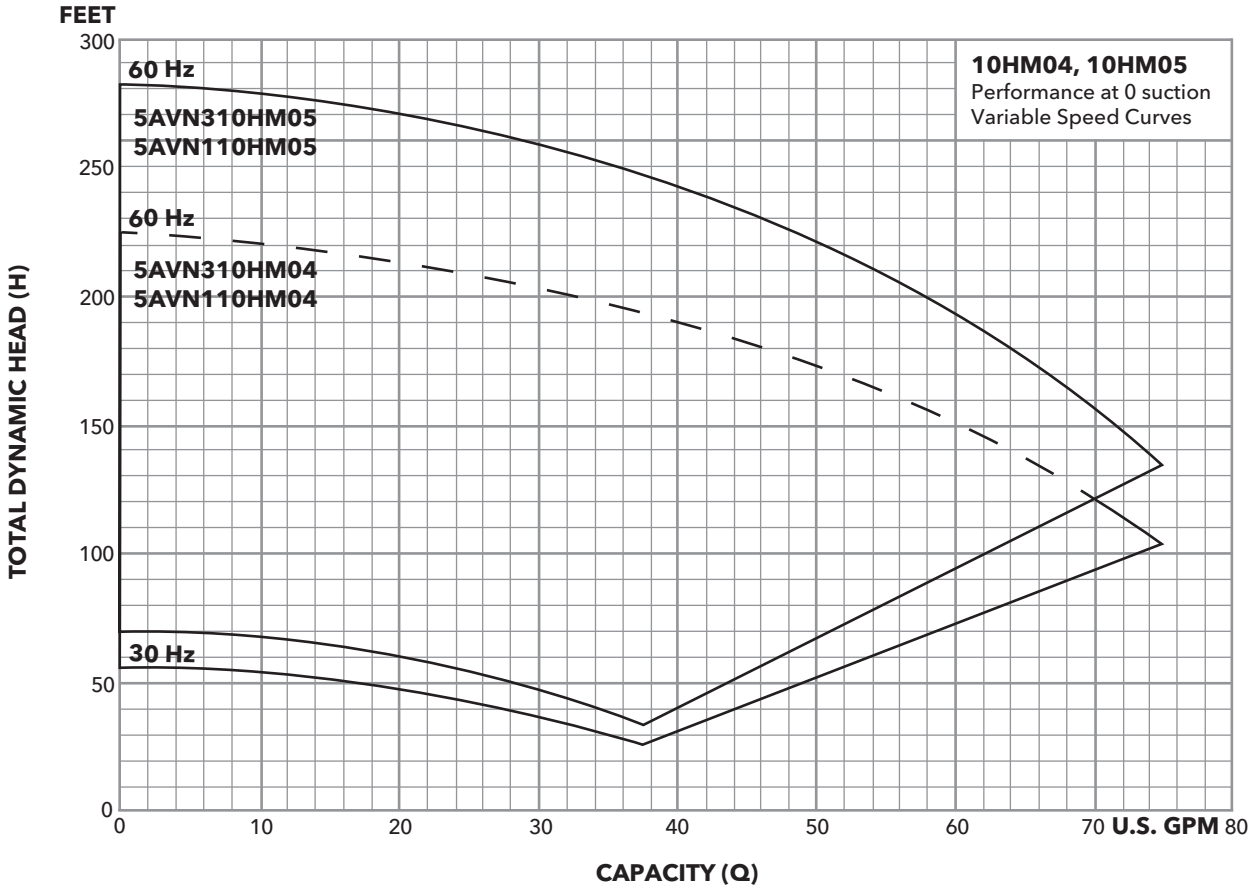
FEET
TOTAL DYNAMIC HEAD (H)
300
250
200
150
100
50
0
60 Hz
5AVN310HM05
5AVN110HM05
60 Hz
5AVN310HM04
5AVN110HM04
30 Hz
10HM04, 10HM05
Performance at 0 suction
Variable Speed Curves
0
10
20
30
40
50
60
70
U.S. GPM
80
CAPACITY (Q)

AQUAVAR IPC FEATURES

Input Power* – 200V to 240V ±10%, single phase (controller only)

Output Power – Up to 230V three phase (based on input voltage).

Maximum Output Current – 10.6 amps (3 HP)
– 16.7 amps (5 HP)

Input Controls – Keypad; LCD graphical display

Signal Lights – Power on, inverter stopped, standby, warning/alarms; auto ON.

Electrical Efficiency – Over 95% at full load

Protection Against – MOTOR: Ground Fault, Motor Stall, Motor Over Temperature, Motor Condensation, Motor Overload. PUMP: Pump No-Flow, Under Pressure, No Water / Loss of Prime, Short-Cycle.

Ambient Temperature – 34° F to 114° F

Maximum Humidity – 93% at 114° F, non-condensing

Air Pollution – Avoid mounting in areas with excessive dust, acids, corrosives and salts.

Approvals – (Listing on Controller Only)

Controller Enclosure – Outdoor, NEMA 3R, IP 43 (Rain-tight); Indoor, NEMA 1, IP 21

Mounting – Wall mount

Cooling – Convection with cast aluminum heat sink.
– With temperature fan

Transducer – 4-20 mA power supply, 300 psi range, 16-foot shielded cable.

Input Wire – Supplied by installer, refer to instruction manual

Output Wire – Supplied by installer, refer to instruction manual

*Low input voltage may affect motor operation.

3 HP
5 HP

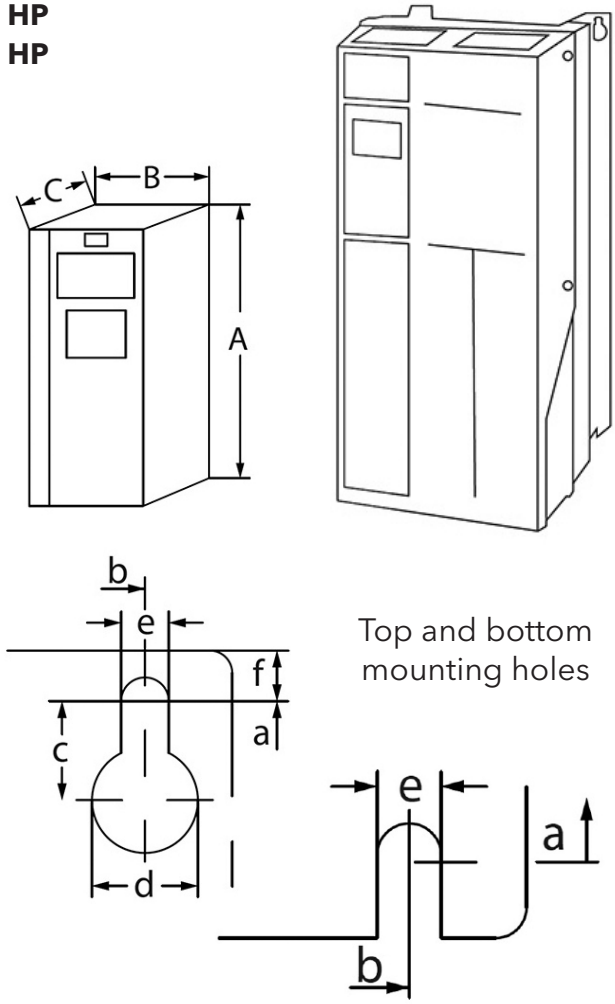

Top and bottom mounting holes

HEIGHT

Enclosure:
18.90 in (480 mm)

Distance Between Mounting Holes (a):
17.87 in (454 mm)

WIDTH

Enclosure:
9.53 in (242 mm)

Distance Between Mounting Holes (b):
8.27 in (210 mm)

DEPTH

Without A/B Option Card*:
10.24 in (260 mm)

SCREW HOLES

c: 0.47 in (12 mm)

d: 0.75 in (19 mm)

e: 0.35 in (9 mm)

f: 0.35 in (9 mm)

Maximum Weight:
51 lbs (23.1 kg)

* Depth of enclosure will vary with different options installed.

PRESSURE RANGE

Nominal Range – Field adjustable through 300 psi, total system pressure.

WARNING **DO NOT SET REQUIRED SYSTEM PRESSURE ABOVE 85 PSI. SEVERE DAMAGE TO PLUMBING COULD RESULT. PLUMB RELIEF VALVE OUTSIDE OR TO A DRAIN.**

DIMENSIONS (For Reference Only - Do not use for construction purposes)

MCS PUMP WITH TANK AND TEE

Capacities – to 120 GPM

Rotation – Right hand clockwise, viewed from motor end

Materials – 316L stainless steel casing
316L impeller

Motor – 5 HP, ODP, Three Phase, 208-230/460V

Pump Connections – 1¼ x 1½ NPT

Maximum Temperature of Water – 120° F
NOTE: Tank Liquid Temperature Limit is 120° F
Pump Liquid Temperature Limit is 140° F

Maximum System Working Pressure – 125 psi

Seal – Carbon / Silicon Carbide / EPR

Overload protection, starters, heaters not required.
Dimensions are in inches.

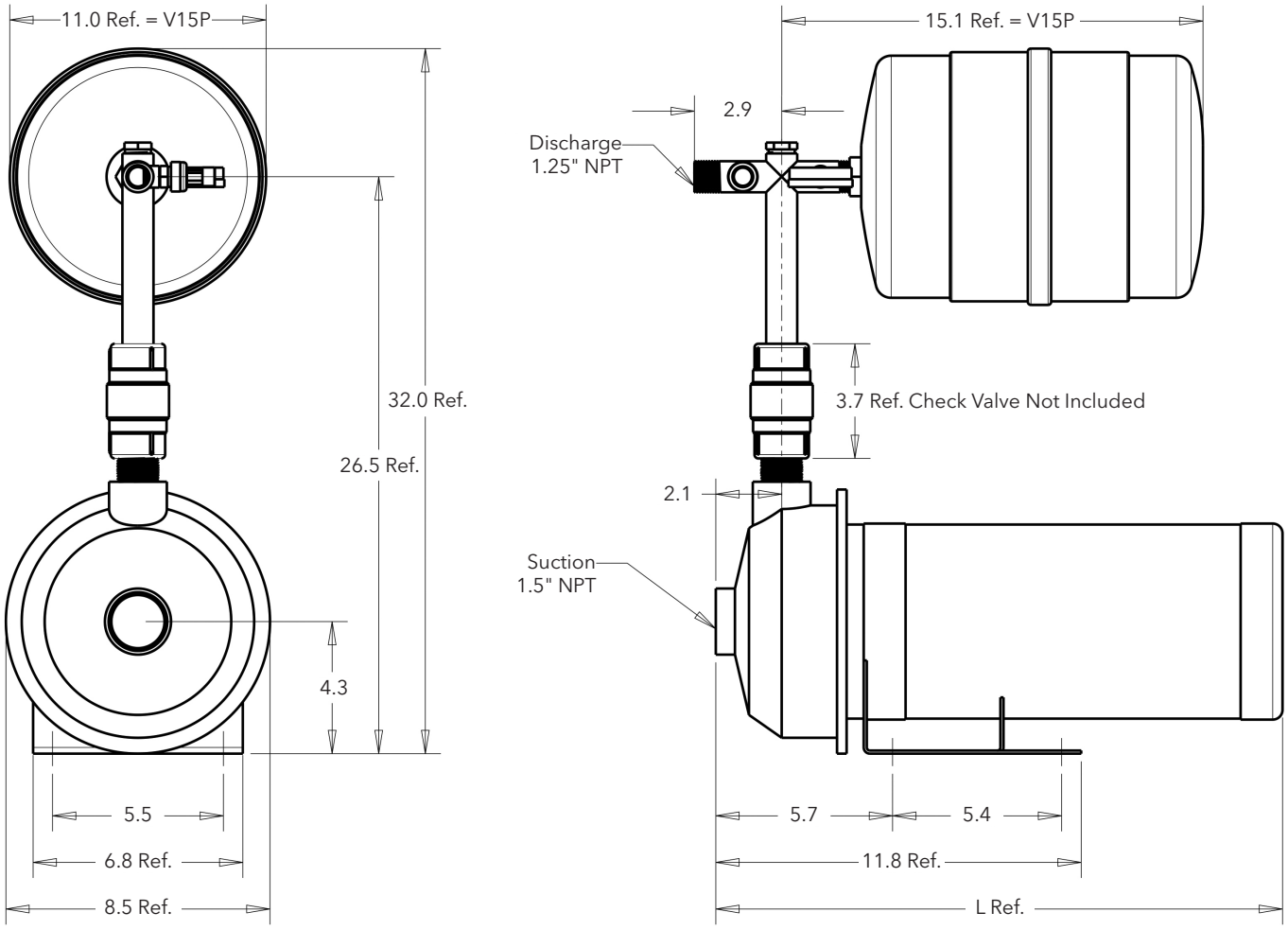

Tank and tee not included

DIMENSIONS (For Reference Only - Do not use for construction purposes)

e-HM PUMPS

Capacities – to 45 GPM (5HM)
to 75 GPM (10HM)
to 127 GPM (15HM)

Rotation – Right hand clockwise, viewed from motor end

Materials – 316L stainless steel for all liquid handling components

Motor – 3 HP, TEFC, Three Phase,208-230/460V (5HM)
– 3 HP, TEFC, Three Phase,208-230/460V (10HM)
– 4 HP, TEFC, Three Phase,208-230/460V (10HM)
– 5.5 HP, TEFC, Three Phase,208-230/460V (10HM/15HM)

Pipe Connections – 1 x 1¼ NPT (5HM)
– 1¼ x 1½ NPT (10HM)
– 1½ x 2 NPT (15HM)

Maximum Temperature of Water – 120° F

NOTE: Tank Liquid Temperature Limit is 120° F
Pump Liquid Temperature Limit is 212° F

Maximum System Working Pressure – 85 psi

Seal – Carbon / Silicon Carbide / EPR

Overload protection, starters, heaters not required. Dimensions are in inches.

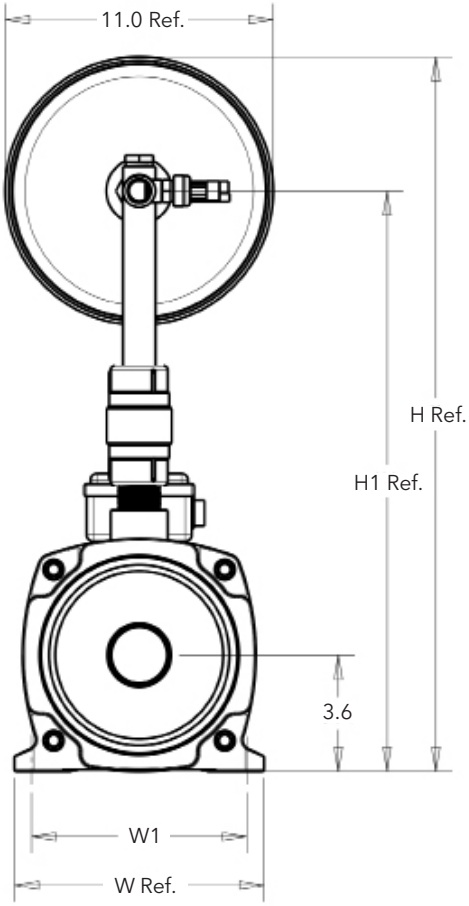

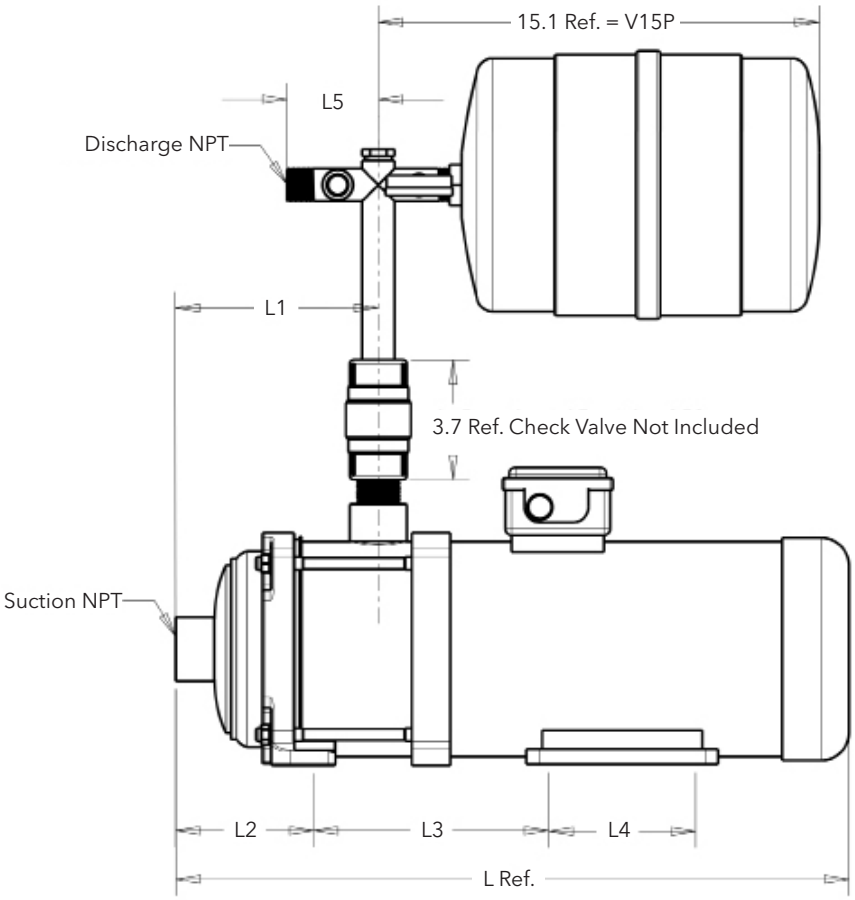

Tank and tee not included

ELEVATION DIMENSIONS - REFERENCES PAGES 14 - 16

	Tank and Tee assembly incl.	L	L1	L2	L3	L4	L5	D	H			Suction NPT	Discharge NPT	Page
125MS1J2B2BP	No	18.3												12
		L	**L1**	**L2**	**L3**	**L4**	**L5**	**H**	**H1**	**W**	**W1**	**Suction NPT**	**Discharge NPT**	**Page**
5HM07N22T6PBQEBP	No	25.1	7.2	4.2	14.7	4.9	2.8	23.4	17.9	6.5	5.5	1.25"	1"	13
10HM03N22T6PBQEBP	No	19.5	4.9	4.3	5.7	4.9	2.9	30.7	25.2	7.7	6.6	1.5"	1.25"	13
10HM04N30T6PBQEBP	No	20.8	6.2	4.3	6.9	4.9	2.9	30.7	25.2	7.7	6.6	1.5"	1.25"	13
10HM05N40T6PBQEBP	No	23.3	7.5	4.3	9.0	5.5	2.9	30.7	25.2	7.7	6.6	1.5"	1.25"	13
15HM03N40T6PBQEBP	No	22.2	5.8	4.3	6.9	5.5	2.9	30.7	25.2	7.7	6.6	2"	1.5"	13

SUBMERSIBLE PUMPS: Use AQUAVAR SOLO^2 or S-Drive controllers for submersible applications, they have filters built-in and are programmed for submersibles; alternatively AQUAVAR IPC with use with DV/DT filter can be used for submersible applications.

PACKAGED HARDWARE WITHOUT PUMP AND MOTOR (SEE PRICING PAGE)

Part Number 15K40

KIT INCLUDES:

1) Tank – V6P (2 gallons)
2) 1" Bronze Discharge Tee – AV20-6
3) Pipe Plug – ½", 6K68
4) Pressure Gauge

Part Number 15K108

KIT INCLUDES:

1) Tank – V15P
2) 1¼" Bronze Discharge Tee – AV20-12
3) Pipe Plug – ½", 6K68
4) Pressure Gauge

NOTES:

Xylem |ˈzīləm|

1) The tissue in plants that brings water upward from the roots;
2) a leading global water technology company.

We're a global team unified in a common purpose: creating advanced technology solutions to the world's water challenges. Developing new technologies that will improve the way water is used, conserved, and re-used in the future is central to our work. Our products and services move, treat, analyze, monitor and return water to the environment, in public utility, industrial, residential and commercial building services settings. Xylem also provides a leading portfolio of smart metering, network technologies and advanced analytics solutions for water, electric and gas utilities. In more than 150 countries, we have strong, long-standing relationships with customers who know us for our powerful combination of leading product brands and applications expertise with a strong focus on developing comprehensive, sustainable solutions.

For more information on how Xylem can help you, go to www.xylem.com

Xylem Product Cybersecurity

Xylem values your system security and the availability of your critical services. For more information on Xylem cybersecurity practices or to contact the cybersecurity team please visit xylem.com/security.

xylem
Let's Solve Water

Xylem Inc.
2881 East Bayard Street Ext., Suite A
Seneca Falls, NY 13148
Phone: (866) 325-4210 • Fax: (888) 322-5877
www.xylem.com/goulds