Manual Index

BARNES®

INSTALLATION and OPERATION MANUAL
Solids Handling Submersible Pump

21 Frame

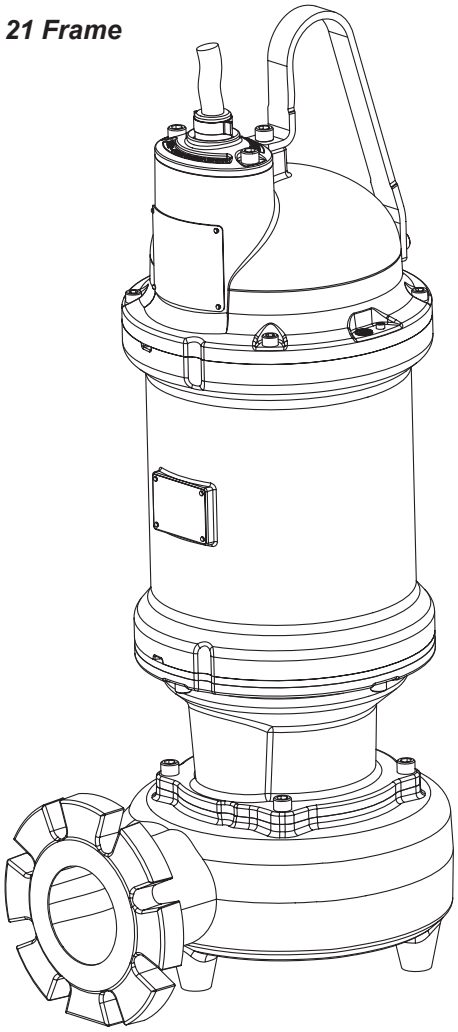

4SHV
Vortex Pumps
7.5 - 30HP, 3450RPM

4SHM
Monovane Pumps
7.5 - 30HP, 1750RPM

4SHD
Dual Vane Pumps
7.5 - 30HP, 1750RPM

6SHV
Vortex Pumps
20 - 30HP, 1750RPM
7.5 - 20HP, 1150RPM

6SHM
Monovane Pumps
15 - 30HP, 1750RPM
7.5 - 20HP, 1150RPM

6SHD
Dual Vane Pumps
25 - 30HP, 1750RPM
7.5 - 20HP, 1150RPM

This product may be covered by one or more of the following patents and other patent(s) pending: US Patent 7,931,473

IMPORTANT! ***Read all instructions in this manual before operating pump. As a result of Crane Pumps & Systems, Inc., constant product improvement program, product changes may occur. As such Crane Pumps & Systems reserves the right to change product without prior written notification.***

CRANE®
A Crane Co. Company

PUMPS & SYSTEMS

420 Third Street
Piqua, Ohio 45356
Phone: (937) 778-8947
Fax: (937) 773-7157
www.cranepumps.com

83 West Drive, Bramton
Ontario, Canada L6T 2J6
Phone: (905) 457-6223
Fax: (905) 457-2650

Submersible Wastewater Pump Association SWPA MEMBER

Form No. 125508-Rev. M

TABLE OF CONTENTS

SAFETY FIRST!

Please Read This Before Installing Or Operating Pump.
This information is provided for **SAFETY and to PREVENT EQUIPMENT PROBLEMS**. To help recognize this information, observe the following symbols:

IMPORTANT! Warns about hazards that can result in personal injury or Indicates factors concerned with assembly, installation, operation, or maintenance which could result in damage to the machine or equipment if ignored.

CAUTION ! Warns about hazards that can or will cause minor personal injury or property damage if ignored. Used with symbols below.

WARNING ! Warns about hazards that can or will cause serious personal injury, death, or major property damage if ignored. Used with symbols below.

Hazardous fluids can cause fire or explosions, burns or death could result.

Extremely hot - Severe burnes can occur on contact.

Biohazard can cause serious personal injury.

Hazardous fluids can Hazardous pressure, eruptions or explosions could cause personal injury or property damage.

Rotating machinery Amputation or severe laceration can result.

Hazardous voltage can shock, burn or cause death.

Only qualified personnel should install, operate and repair pump. Any wiring of pumps should be performed by a qualified electrician.

WARNING ! - To reduce risk of electrical shock, pumps and control panels must be properly grounded in accordance with the National Electric Code (NEC) or the Canadian Electrical Code (CEC) and all applicable state, province, local codes and ordinances.

WARNING! - To reduce risk of electrical shock, always disconnect the pump from the power source before handling or servicing. Lock out power and tag.

WARNING! Operation against a closed discharge valve will cause premature bearing and seal failure on any pump, and on end suction and self priming pump the heat build may cause the generation of steam with resulting dangerous pressures. It is recommended that a high case temperature switch or pressure relief valve be installed on the pump body.

CAUTION ! Never operate a pump with a plug-in type power cord without a ground fault circuit interrupter.

CAUTION! Pumps build up heat and pressure during operation-allow time for pumps to cool before handling or servicing.

WARNING! - **DO NOT** pump hazardous materials (flammable, caustic, etc.) unless the pump is specifically designed and designated to handle them.

Do not block or restrict discharge hose, as discharge hose may whip under pressure.

WARNING! - DO NOT wear loose clothing that may become entangled in the impeller or other moving parts.

WARNING! - Keep clear of suction and discharge openings. **DO NOT** insert fingers in pump with power connected.

Always wear eye protection when working on pumps.

Make sure lifting handles are securely fastened each time before lifting. **DO NOT** operate pump without safety devices in place. Always replace safety devices that have been removed during service or repair. Secure the pump in its operating position so it can not tip over, fall or slide.

DO NOT exceed manufacturers recommendation for maximum performance, as this could cause the motor to overheat.

DO NOT remove cord and strain relief. Do not connect conduit to pump.

WARNING! Cable should be protected at all times to avoid punctures, cut, bruises and abrasions - inspect frequently. Never handle connected power cords with wet hands.

WARNING! To reduce risk of electrical shock, all wiring and junction connections should be made per the NEC or CEC and applicable state or province and local codes. Requirements may vary depending on usage and location.

WARNING! Submersible Pumps are not approved for use in swimming pools, recreational water installations, decorative fountains or any installation where human contact with the pumped fluid is common.

WARNING! Products Returned Must Be Cleaned, Sanitized, Or Decontaminated As Necessary Prior To Shipment, To Insure That Employees Will Not Be Exposed To Health Hazards In Handling Said Material. All Applicable Laws And Regulations Shall Apply.

Bronze/brass and bronze/brass fitted pumps may contain lead levels higher than considered safe for potable water systems. Lead is known to cause cancer and birth defects or other reproductive harm. Various government agencies have determined that leaded copper alloys should not be used in potable water applications. For non-leaded copper alloy materials of construction, please contact factory.

IMPORTANT! - Crane Pumps & Systems, Inc. is not responsible for losses, injury, or death resulting from a failure to observe these safety precautions, misuse or abuse of pumps or equipment.

SECTION: A - PUMP SPECIFICATIONS: 4SHVA & 4SHVB (Vortex) Pump Models

DISCHARGE ..... 4", 125 lb. Horizontal Flange Slotted to accomodate 100mm ISO Flanges
LIQUID TEMPERATURE ... 104°F (40°C) Continuous
VOLUTE ..... Cast Iron ASTM A-48, Class 30
WEAR RING..... C954 Lead-Free Bronze
MOTOR HOUSING..... Cast Iron ASTM A-48, Class 30
SEAL PLATE ..... Cast Iron ASTM A-48, Class 30
IMPELLER:
Design..... Vortex, With Pump Out Vanes on Back Side. Dynamically Balanced ISO G6.3
Material ..... Ductile Iron ASTM A-536, 65-45-12
SHAFT ..... 416 Stainless Steel
"O" RINGS..... Buna-N
HARDWARE ..... 300 Series Stainless Steel
LIFTING BALL..... 300 Series Stainless Steel
PAINT ..... Epoxy Dupont Corlar® Amine Epoxy, Two Coats
SEAL: *Design* ..... Tandem Mechanical, Oil Filled Reservoir.
Material: Inboard.... Rotating Face - Carbon
Stationary Face - Ceramic
Material: Outboard. Rotating Face - Silicon Carbide
Stationary Face - Silicon Carbide
Elastomer - Buna-N (Both Seals)
Hardware - 300 Series Stainless (Both Seals)
CORD ENTRY..... Custom Molded, Quick Connected for Sealing and Strain Relief
POWER CORD ..... CSA Certified Submersible Power Cable 2000V - Ordered Separately
SPEED ..... 3450 RPM (Nominal)
UPPER BEARING:
Design ..... Single Row, Ball, Oil Lubricated
Load ..... Radial
LOWER BEARING:
Design ..... Double Row, Ball, Oil Lubricated
Load..... Radial & Thrust
MOTOR: *Design* ..... NEMA B Three Phase Torque Curve. Oil-Filled, Squirrel Cage Induction, Inverter duty rated per NEMA MG-1 part 31
Insulation..... Class H, Varnish & Magnet Wire
THREE PHASE..... Tri-voltage 208-230/460V up to15HP, Dual Voltage 230/460V up to 20 HP, 460V only 25 & 30 HP & 575V; Requires Overload Protec tion to be included in control panel.
MOISTURE SENSOR ..... Normally Open (N/O) with 330 K-Ohm Test Resistor Across Probes. Requires Relay in Control Panel
TEMPERATURE SENSOR .. Three Normally Closed (N/C). To be wired in series with contactor control circuit
OPTIONAL EQUIPMENT.. Seal Material, Impeller Trims, Cord Length, Leg Kit (p/n 125506)
MARKINGS..... CSA, CE
WEIGHT ..... 399 Pounds (181 Kg)
NOISE EMISSION MAX.... In-Air 73 dB-A
SUBMERGENCE ..... Max Depth 66ft (20m)

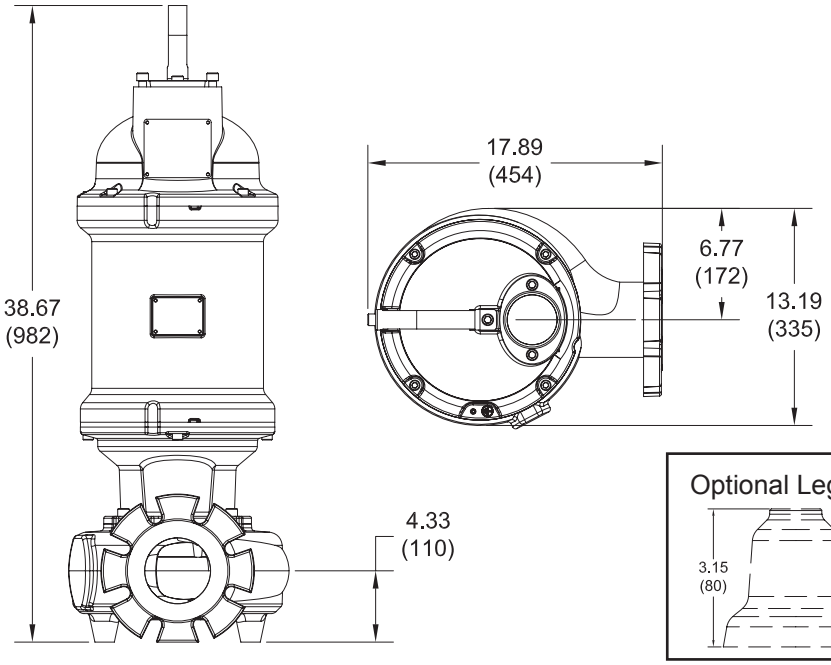

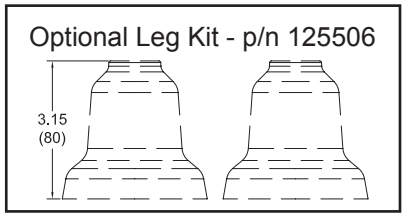

IMPORTANT !

1.) MOISTURE AND TEMPERATURE SENSORS MUST BE CONNECTED TO VALIDATE THE CSA LISTING.
2.) A SPECIAL MOISTURE SENSOR RELAY IS REQUIRED IN THE CONTROL PANEL FOR PROPER OPERATION OF THE MOISTURE SENSORS. CONTACT BARNES PUMPS FOR INFORMATION CONCERNING MOISTURE SENSING RELAYS FOR CUSTOMER SUPPLIED CONTROL PANELS.
3.) THESE PUMPS ARE CSA LISTED FOR PUMPING WATER AND WASTEWATER. **DO NOT USE TO PUMP FLAMMABLE LIQUIDS**.
4.) INSTALLATIONS SUCH AS DECORATIVE FOUNTAINS OR WATER FEATURES PROVIDED FOR VISUAL ENJOYMENT MUST BE INSTALLED IN ACCORDANCE WITH THE NATIONAL ELECTRIC CODE ANSI/NFPA 70 AND/OR THE AUTHORITY HAVING JURISDICTION. THIS PUMP IS NOT INTENDED FOR USE IN SWIMMING POOLS, RECREATIONAL WATER PARKS, OR INSTALLATIONS IN WHICH HUMAN CONTACT WITH PUMPED MEDIA IS A COMMON OCCURRENCE.
5.) THIS PUMP IS NOT APPROPRIATE FOR THOSE APPLICATIONS SPECIFIED AS CLASS 1 DIVISION 1 HAZARDOUS LOCATIONS.

SECTION: A - PUMP SPECIFICATIONS: 4SHMC (Enclosed Monovane) Pump Models

DISCHARGE ..... 4", 125 lb. Horizontal Flange Slotted to accomodate 100mm ISO Flanges
LIQUID TEMPERATURE ... 104°F (40°C) Continuous
VOLUTE ..... Cast Iron ASTM A-48, Class 30
WEAR RING..... C954 Lead-Free Bronze
MOTOR HOUSING..... Cast Iron ASTM A-48, Class 30
SEAL PLATE ..... Cast Iron ASTM A-48, Class 30
IMPELLER:
Design..... Enclosed Monovane, With Pump Out Vanes on Back Side. Dynamically Balanced ISO G6.3
Material ..... Ductile Iron ASTM A-536, 65-45-12
SHAFT ..... 416 Stainless Steel
"O" RINGS..... Buna-N
HARDWARE ..... 300 Series Stainless Steel
LIFTING BALL..... 300 Series Stainless Steel
PAINT ..... Epoxy Dupont Corlar® Amine Epoxy, Two Coats
SEAL: *Design* ..... Tandem Mechanical, Oil Filled Reservoir.
Material: Inboard.... Rotating Face - Carbon Stationary Face - Ceramic
Material: Outboard. Rotating Face - Silicon Carbide Stationary Face - Silicon Carbide Elastomer - Buna-N (Both Seals) Hardware - 300 Series Stainless (Both Seals)
CORD ENTRY..... Custom Molded, Quick Connected for Sealing and Strain Relief

POWER CORD ..... CSA Certified Submersible Power Cable 2000V - Ordered Separately
SPEED ..... 1750 RPM (Nominal)
UPPER BEARING:
Design ..... Single Row, Ball, Oil Lubricated
Load ..... Radial
LOWER BEARING:
Design ..... Double Row, Ball, Oil Lubricated
Load..... Radial & Thrust
MOTOR: *Design* ..... NEMA B Three Phase Torque Curve. Oil-Filled, Squirrel Cage Induction, Inverter duty rated per NEMA MG-1 part 31
Insulation..... Class H, Varnish & Magnet Wire
THREE PHASE..... Tri-voltage 208-230/460V, 575V; Requires Overload Protection to be included in control panel.
MOISTURE SENSOR ..... Normally Open (N/O) with 330 K-Ohm Test Resistor Across Probes. Requires Relay in Control Panel
TEMPERATURE SENSOR .. Three Normally Closed (N/C). To be wired in series with contactor control circuit
OPTIONAL EQUIPMENT.. Seal Material, Impeller Trims, Cord Length, Leg Kit (p/n 125506)
MARKINGS..... CSA, CE
WEIGHT ..... 437 Pounds (198 Kg)
NOISE EMISSION MAX.... In-Air 73 dB-A
SUBMERGENCE ..... Max Depth 66ft (20m)

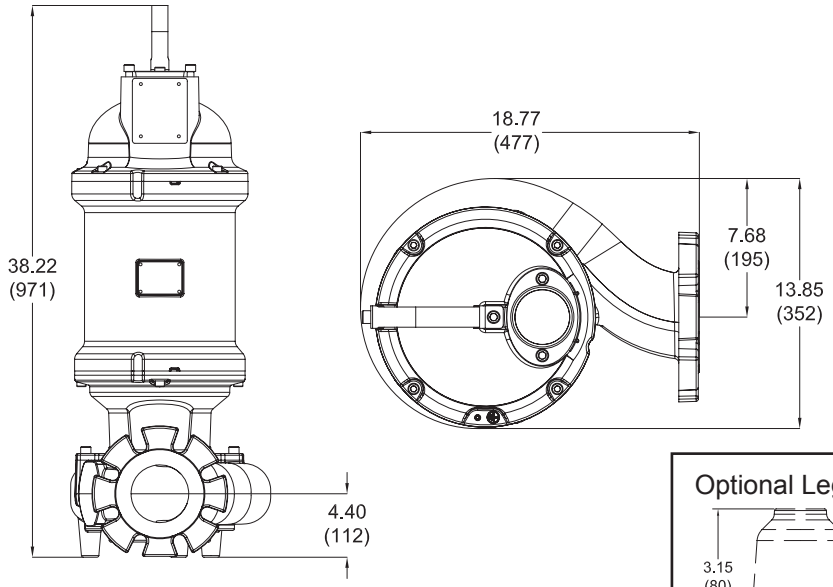

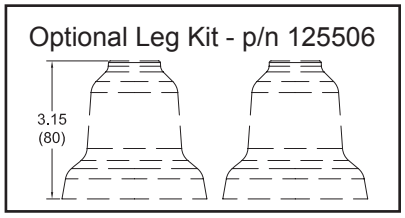

IMPORTANT !

1.) MOISTURE AND TEMPERATURE SENSORS MUST BE CONNECTED TO VALIDATE THE CSA LISTING.
2.) A SPECIAL MOISTURE SENSOR RELAY IS REQUIRED IN THE CONTROL PANEL FOR PROPER OPERATION OF THE MOISTURE SENSORS. CONTACT BARNES PUMPS FOR INFORMATION CONCERNING MOISTURE SENSING RELAYS FOR CUSTOMER SUPPLIED CONTROL PANELS.
3.) THESE PUMPS ARE CSA LISTED FOR PUMPING WATER AND WASTEWATER. **DO NOT USE TO PUMP FLAMMABLE LIQUIDS**.
4.) INSTALLATIONS SUCH AS DECORATIVE FOUNTAINS OR WATER FEATURES PROVIDED FOR VISUAL ENJOYMENT MUST BE INSTALLED IN ACCORDANCE WITH THE NATIONAL ELECTRIC CODE ANSI/NFPA 70 AND/OR THE AUTHORITY HAVING JURISDICTION. THIS PUMP IS NOT INTENDED FOR USE IN SWIMMING POOLS, RECREATIONAL WATER PARKS, OR INSTALLATIONS IN WHICH HUMAN CONTACT WITH PUMPED MEDIA IS A COMMON OCCURRENCE.
5.) THIS PUMP IS NOT APPROPRIATE FOR THOSE APPLICATIONS SPECIFIED AS CLASS 1 DIVISION 1 HAZARDOUS LOCATIONS.

SECTION: A - PUMP SPECIFICATIONS: 4SHMD (Enclosed Monovane) Pump Models

DISCHARGE ..... 4", 125 lb. Horizontal Flange Slotted to accomodate 100mm ISO Flanges
LIQUID TEMPERATURE ... 104°F (40°C) Continuous
VOLUTE ..... Cast Iron ASTM A-48, Class 30
WEAR RING..... C954 Lead-Free Bronze
MOTOR HOUSING..... Cast Iron ASTM A-48, Class 30
SEAL PLATE ..... Cast Iron ASTM A-48, Class 30
IMPELLER:
Design..... Enclosed Monovane, With Pump Out Vanes on Back Side. Dynamically Balanced ISO G6.3
Material ..... Ductile Iron ASTM A-536, 65-45-12
SHAFT ..... 416 Stainless Steel
"O" RINGS..... Buna-N
HARDWARE ..... 300 Series Stainless Steel
LIFTING BALL..... 300 Series Stainless Steel
PAINT ..... Epoxy Dupont Corlar® Amine Epoxy, Two Coats
SEAL: *Design* ..... Tandem Mechanical, Oil Filled Reservoir.
Material: Inboard.... Rotating Face - Carbon Stationary Face - Ceramic
Material: Outboard. Rotating Face - Silicon Carbide Stationary Face - Silicon Carbide Elastomer - Buna-N (Both Seals) Hardware - 300 Series Stainless (Both Seals)
CORD ENTRY..... Custom Molded, Quick Connected for Sealing and Strain Relief
POWER CORD ..... CSA Certified Submersible Power Cable 2000V - Ordered Separately
SPEED ..... 1750 RPM (Nominal)
UPPER BEARING:
Design ..... Single Row, Ball, Oil Lubricated
Load ..... Radial
LOWER BEARING:
Design ..... Double Row, Ball, Oil Lubricated
Load..... Radial & Thrust
MOTOR: *Design* ..... NEMA B Three Phase Torque Curve. Oil-Filled, Squirrel Cage Induction, Inverter duty rated per NEMA MG-1 part 31
Insulation..... Class H, Varnish & Magnet Wire
THREE PHASE..... Dual Voltage 230/460V up to 20 HP, 460V only 25 & 30 HP & 575V; Requires Overload Protection to be included in control panel.
MOISTURE SENSOR ..... Normally Open (N/O) with 330 K-Ohm Test Resistor Across Probes. Requires Relay in Control Panel
TEMPERATURE SENSOR .. Three Normally Closed (N/C). To be wired in series with contactor control circuit
OPTIONAL EQUIPMENT.. Seal Material, Impeller Trims, Cord Length, Leg Kit (p/n 125506)
MARKINGS..... CSA, CE
WEIGHT ..... 461 Pounds (209 Kg)
NOISE EMISSION MAX.... In-Air 73 dB-A
SUBMERGENCE ..... Max Depth 66ft (20m)

Dimensions inches (mm)

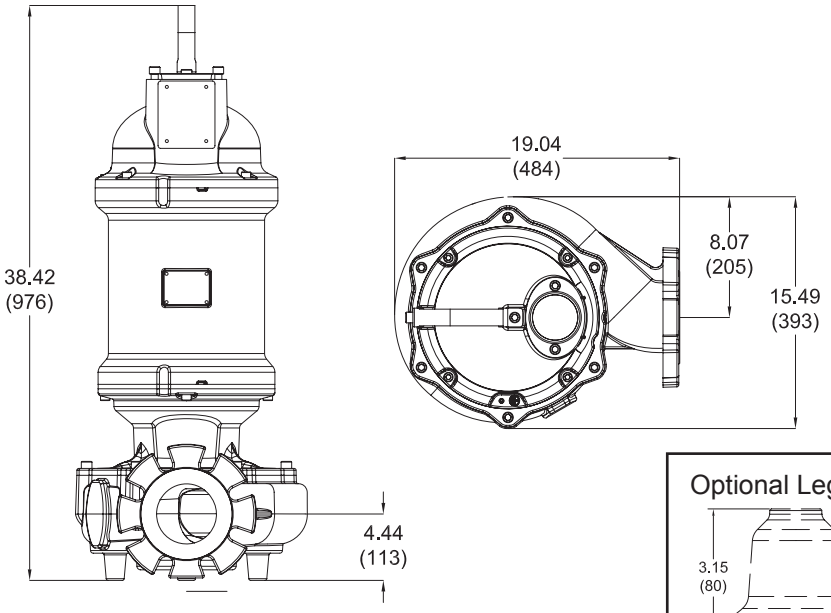

Optional Leg Kit - p/n 125506

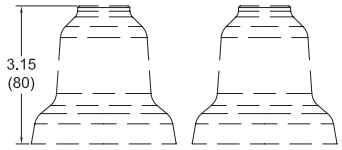

IMPORTANT !

1.) MOISTURE AND TEMPERATURE SENSORS MUST BE CONNECTED TO VALIDATE THE CSA LISTING.
2.) A SPECIAL MOISTURE SENSOR RELAY IS REQUIRED IN THE CONTROL PANEL FOR PROPER OPERATION OF THE MOISTURE SENSORS. CONTACT BARNES PUMPS FOR INFORMATION CONCERNING MOISTURE SENSING RELAYS FOR CUSTOMER SUPPLIED CONTROL PANELS.
3.) THESE PUMPS ARE CSA LISTED FOR PUMPING WATER AND WASTEWATER. **DO NOT USE TO PUMP FLAMMABLE LIQUIDS**.
4.) INSTALLATIONS SUCH AS DECORATIVE FOUNTAINS OR WATER FEATURES PROVIDED FOR VISUAL ENJOYMENT MUST BE INSTALLED IN ACCORDANCE WITH THE NATIONAL ELECTRIC CODE ANSI/NFPA 70 AND/OR THE AUTHORITY HAVING JURISDICTION. THIS PUMP IS NOT INTENDED FOR USE IN SWIMMING POOLS, RECREATIONAL WATER PARKS, OR INSTALLATIONS IN WHICH HUMAN CONTACT WITH PUMPED MEDIA IS A COMMON OCCURRENCE.
5.) THIS PUMP IS NOT APPROPRIATE FOR THOSE APPLICATIONS SPECIFIED AS CLASS 1 DIVISION 1 HAZARDOUS LOCATIONS.

SECTION: A - PUMP SPECIFICATIONS: 4SHDG (Enclosed Dual Vane) Pump Models

DISCHARGE ..... 4", 125 lb. Horizontal Flange Slotted to accomodate 100mm ISO Flanges
LIQUID TEMPERATURE ... 104°F (40°C) Continuous
VOLUTE ..... Cast Iron ASTM A-48, Class 30
WEAR RING ..... C954 Lead-Free Bronze
MOTOR HOUSING ..... Cast Iron ASTM A-48, Class 30
SEAL PLATE ..... Cast Iron ASTM A-48, Class 30
IMPELLER:
Design ..... Enclosed Dual Vane, With Pump Out Vanes on Back Side. Dynamically Balanced ISO G6.3
Material ..... Ductile Iron ASTM A-536, 65-45-12
SHAFT ..... 416 Stainless Steel
"O" RINGS ..... Buna-N
HARDWARE ..... 300 Series Stainless Steel
LIFTING BALL ..... 300 Series Stainless Steel
PAINT ..... Epoxy Dupont Corlar® Amine Epoxy, Two Coats
SEAL: *Design* ..... Tandem Mechanical, Oil Filled Reservoir.
Material: Inboard .... Rotating Face - Carbon Stationary Face - Ceramic
Material: Outboard. Rotating Face - Silicon Carbide Stationary Face - Silicon Carbide Elastomer - Buna-N (Both Seals) Hardware - 300 Series Stainless (Both Seals)
CORD ENTRY ..... Custom Molded, Quick Connected for Sealing and Strain Relief
POWER CORD ..... CSA Certified Submersible Power Cable 2000V - Ordered Separately

SPEED ..... 1750 RPM (Nominal)
UPPER BEARING:
Design ..... Single Row, Ball, Oil Lubricated
Load ..... Radial
LOWER BEARING:
Design ..... Double Row, Ball, Oil Lubricated
Load ..... Radial & Thrust
MOTOR: *Design* ..... NEMA B Three Phase Torque Curve. Oil-Filled, Squirrel Cage Induction, Inverter duty rated per NEMA MG-1 part 31
Insulation ..... Class H, Varnish & Magnet Wire
THREE PHASE ..... Tri-voltage 208-230/460V up to 15HP, Dual Voltage 230/460V up to 20 HP & 575V; 7.5 thru 30HP. Requires Overload Protection to be Included in control panel.
MOISTURE SENSOR ..... Normally Open (N/O) with 330 K-Ohm Test Resistor Across Probes. Requires Relay in Control Panel
TEMPERATURE SENSOR .. Three Normally Closed (N/C). To be wired in series with contactor control circuit
OPTIONAL EQUIPMENT .. Seal Material, Impeller Trims, Cord Length, Leg Kit (p/n 125506)
MARKINGS ..... CSA, CE
WEIGHT ..... 437 Pounds (198 Kg)
NOISE EMISSION MAX .... In-Air 73 dB-A
SUBMERGENCE ..... Max Depth 66ft (20m)

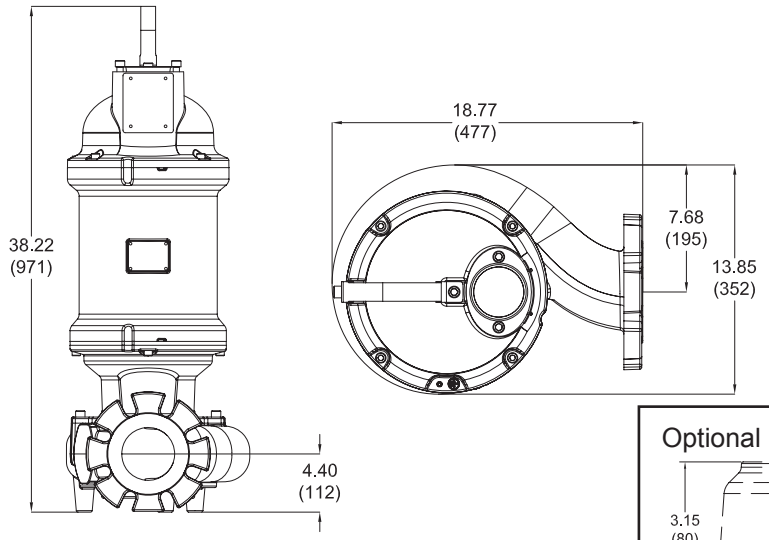

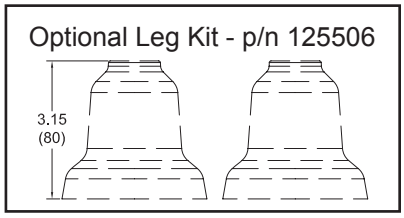

IMPORTANT !

1.) MOISTURE AND TEMPERATURE SENSORS MUST BE CONNECTED TO VALIDATE THE CSA LISTING.
2.) A SPECIAL MOISTURE SENSOR RELAY IS REQUIRED IN THE CONTROL PANEL FOR PROPER OPERATION OF THE MOISTURE SENSORS. CONTACT BARNES PUMPS FOR INFORMATION CONCERNING MOISTURE SENSING RELAYS FOR CUSTOMER SUPPLIED CONTROL PANELS.
3.) THESE PUMPS ARE CSA LISTED FOR PUMPING WATER AND WASTEWATER. **DO NOT USE TO PUMP FLAMMABLE LIQUIDS**.
4.) INSTALLATIONS SUCH AS DECORATIVE FOUNTAINS OR WATER FEATURES PROVIDED FOR VISUAL ENJOYMENT MUST BE INSTALLED IN ACCORDANCE WITH THE NATIONAL ELECTRIC CODE ANSI/NFPA 70 AND/OR THE AUTHORITY HAVING JURISDICTION. THIS PUMP IS NOT INTENDED FOR USE IN SWIMMING POOLS, RECREATIONAL WATER PARKS, OR INSTALLATIONS IN WHICH HUMAN CONTACT WITH PUMPED MEDIA IS A COMMON OCCURRENCE.
5.) THIS PUMP IS NOT APPROPRIATE FOR THOSE APPLICATIONS SPECIFIED AS CLASS 1 DIVISION 1 HAZARDOUS LOCATIONS.

SECTION: A - PUMP SPECIFICATIONS: 4SHDI (Enclosed Dual Vane) Pump Models

DISCHARGE ..... 4", 125 lb. Horizontal Flange Slotted to accomodate 100mm ISO Flanges
LIQUID TEMPERATURE ... 104°F (40°C) Continuous
VOLUTE ..... Cast Iron ASTM A-48, Class 30
WEAR RING..... C954 Lead-Free Bronze
MOTOR HOUSING..... Cast Iron ASTM A-48, Class 30
SEAL PLATE ..... Cast Iron ASTM A-48, Class 30
IMPELLER:
Design..... Enclosed Dual Vane, With Pump Out Vanes on Back Side. Dynamically Balanced ISO G6.3
Material ..... Ductile Iron ASTM A-536, 65-45-12
SHAFT ..... 416 Stainless Steel
"O" RINGS..... Buna-N
HARDWARE ..... 300 Series Stainless Steel
LIFTING BALL..... 300 Series Stainless Steel
PAINT ..... Epoxy Dupont Corlar® Amine Epoxy, Two Coats
SEAL: *Design* ..... Tandem Mechanical, Oil Filled Reservoir.
Material: Inboard.... Rotating Face - Carbon Stationary Face - Ceramic
Material: Outboard. Rotating Face - Silicon Carbide Stationary Face - Silicon Carbide Elastomer - Buna-N (Both Seals) Hardware - 300 Series Stainless (Both Seals)
CORD ENTRY..... Custom Molded, Quick Connected for Sealing and Strain Relief
POWER CORD ..... CSA Certified Submersible Power Cable 2000V - Ordered Separately
SPEED ..... 1750 RPM (Nominal)
UPPER BEARING:
Design ..... Single Row, Ball, Oil Lubricated
Load ..... Radial
LOWER BEARING:
Design ..... Double Row, Ball, Oil Lubricated
Load..... Radial & Thrust
MOTOR: *Design* ..... NEMA B Three Phase Torque Curve. Oil-Filled, Squirrel Cage Induction, Inverter duty rated per NEMA MG-1 part 31
Insulation..... Class H, Varnish & Magnet Wire
THREE PHASE..... Dual Voltage 230/460V up to 20 HP, 460V only 25 & 30 HP & 575V; Requires Overload Protection to be included in control panel.
MOISTURE SENSOR ..... Normally Open (N/O) with 330 K-Ohm Test Resistor Across Probes. Requires Relay in Control Panel
TEMPERATURE SENSOR .. Three Normally Closed (N/C). To be wired in series with contactor control circuit
OPTIONAL EQUIPMENT.. Seal Material, Impeller Trims, Cord Length, Leg Kit (p/n 125506)
MARKINGS..... CSA, CE
WEIGHT ..... 546 Pounds (382 Kg)
NOISE EMISSION MAX.... In-Air 73 dB-A
SUBMERGENCE ..... Max Depth 66ft (20m)

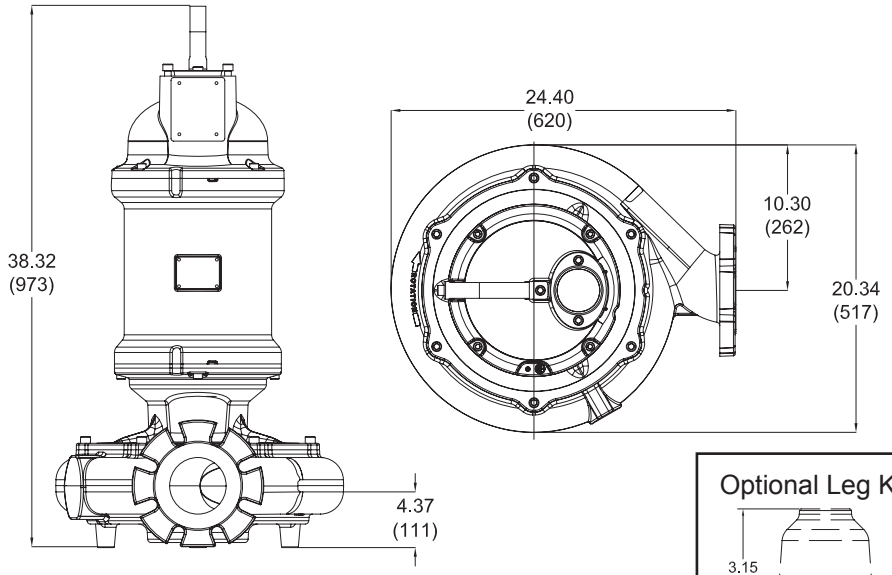

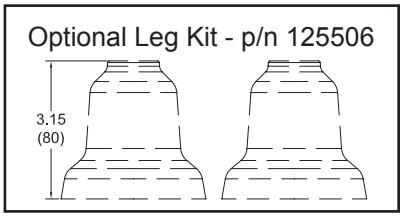

IMPORTANT !

1.) MOISTURE AND TEMPERATURE SENSORS MUST BE CONNECTED TO VALIDATE THE CSA LISTING.
2.) A SPECIAL MOISTURE SENSOR RELAY IS REQUIRED IN THE CONTROL PANEL FOR PROPER OPERATION OF THE MOISTURE SENSORS. CONTACT BARNES PUMPS FOR INFORMATION CONCERNING MOISTURE SENSING RELAYS FOR CUSTOMER SUPPLIED CONTROL PANELS.
3.) THESE PUMPS ARE CSA LISTED FOR PUMPING WATER AND WASTEWATER. **DO NOT USE TO PUMP FLAMMABLE LIQUIDS**.
4.) INSTALLATIONS SUCH AS DECORATIVE FOUNTAINS OR WATER FEATURES PROVIDED FOR VISUAL ENJOYMENT MUST BE INSTALLED IN ACCORDANCE WITH THE NATIONAL ELECTRIC CODE ANSI/NFPA 70 AND/OR THE AUTHORITY HAVING JURISDICTION. THIS PUMP IS NOT INTENDED FOR USE IN SWIMMING POOLS, RECREATIONAL WATER PARKS, OR INSTALLATIONS IN WHICH HUMAN CONTACT WITH PUMPED MEDIA IS A COMMON OCCURRENCE.
5.) THIS PUMP IS NOT APPROPRIATE FOR THOSE APPLICATIONS SPECIFIED AS CLASS 1 DIVISION 1 HAZARDOUS LOCATIONS.

SECTION: A - PUMP SPECIFICATIONS: 6SHVL (Vortex) Pump Models

DISCHARGE ..... 6”, 125 lb. Horizontal Flange Slotted to accomodate 150mm ISO Flanges
LIQUID TEMPERATURE ... 104°F (40°C) Continuous
VOLUTE ..... Cast Iron ASTM A-48, Class 30
WEAR RING..... C954 Lead-Free Bronze
MOTOR HOUSING..... Cast Iron ASTM A-48, Class 30
SEAL PLATE ..... Cast Iron ASTM A-48, Class 30
IMPELLER:
Design..... Vortex, With Pump Out Vanes on Back Side. Dynamically Balanced ISO G6.3
Material ..... Ductile Iron ASTM A-536, 65-45-12
SHAFT ..... 416 Stainless Steel
“O” RINGS..... Buna-N
HARDWARE ..... 300 Series Stainless Steel
LIFTING BALL..... 300 Series Stainless Steel
PAINT ..... Epoxy Dupont Corlar® Amine Epoxy, Two Coats
SEAL: *Design* ..... Tandem Mechanical, Oil Filled Reservoir.
Material: Inboard.... Rotating Face - Carbon Stationary Face - Ceramic
Material: Outboard. Rotating Face - Silicon Carbide Stationary Face - Silicon Carbide Elastomer - Buna-N (Both Seals) Hardware - 300 Series Stainless (Both Seals)
CORD ENTRY..... Custom Molded, Quick Connected for Sealing and Strain Relief
POWER CORD ..... CSA Certified Submersible Power Cable 2000V - Ordered Separately
SPEED ..... 1750 & 1150 RPM (Nominal)
UPPER BEARING:
Design ..... Single Row, Ball, Oil Lubricated
Load ..... Radial
LOWER BEARING:
Design ..... Double Row, Ball, Oil Lubricated
Load..... Radial & Thrust
MOTOR: *Design* ..... NEMA B Three Phase Torque Curve. Oil-Filled, Squirrel Cage Induction, Inverter duty rated per NEMA MG-1 part 31
Insulation..... Class H, Varnish & Magnet Wire
THREE PHASE..... Tri-voltage 208-230/460V up to15HP, Dual Voltage 230/460V up to 20 HP, 460V only 25 & 30 HP & 575V; Requires Overload Protec tion to be included in control panel.
MOISTURE SENSOR ..... Normally Open (N/O) with 330 K-Ohm Test Resistor Across Probes. Requires Relay in Control Panel
TEMPERATURE SENSOR .. Three Normally Closed (N/C). To be wired in series with contactor control circuit
OPTIONAL EQUIPMENT.. Seal Material, Impeller Trims, Cord Length, Leg Kit (p/n 125506)
MARKINGS..... CSA, CE
WEIGHT ..... 509 Pounds (231 Kg)
NOISE EMISSION MAX.... In-Air 64 dB-A
SUBMERGENCE ..... Max Depth 66ft (20m)

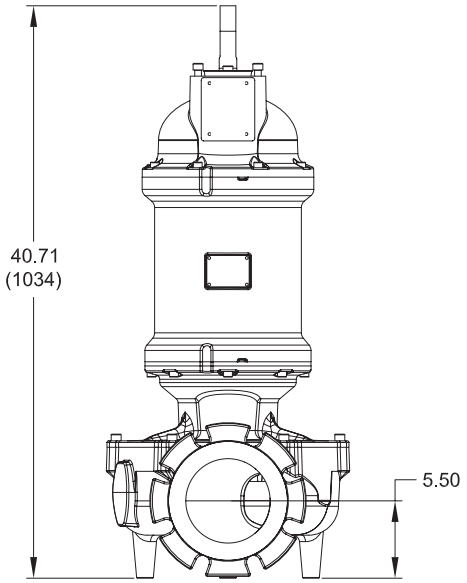

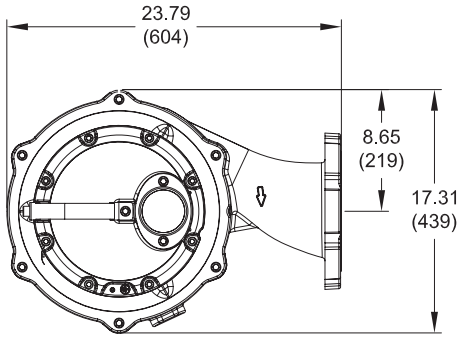

Dimensions inches (mm)

Optional Leg Kit - p/n 125506

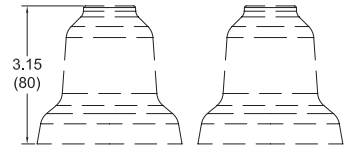

IMPORTANT !

1.) MOISTURE AND TEMPERATURE SENSORS MUST BE CONNECTED TO VALIDATE THE CSA LISTING.
2.) A SPECIAL MOISTURE SENSOR RELAY IS REQUIRED IN THE CONTROL PANEL FOR PROPER OPERATION OF THE MOISTURE SENSORS. CONTACT BARNES PUMPS FOR INFORMATION CONCERNING MOISTURE SENSING RELAYS FOR CUSTOMER SUPPLIED CONTROL PANELS.
3.) THESE PUMPS ARE CSA LISTED FOR PUMPING WATER AND WASTEWATER. **DO NOT USE TO PUMP FLAMMABLE LIQUIDS**.
4.) INSTALLATIONS SUCH AS DECORATIVE FOUNTAINS OR WATER FEATURES PROVIDED FOR VISUAL ENJOYMENT MUST BE INSTALLED IN ACCORDANCE WITH THE NATIONAL ELECTRIC CODE ANSI/NFPA 70 AND/OR THE AUTHORITY HAVING JURISDICTION. THIS PUMP IS NOT INTENDED FOR USE IN SWIMMING POOLS, RECREATIONAL WATER PARKS, OR INSTALLATIONS IN WHICH HUMAN CONTACT WITH PUMPED MEDIA IS A COMMON OCCURRENCE.
5.) THIS PUMP IS NOT APPROPRIATE FOR THOSE APPLICATIONS SPECIFIED AS CLASS 1 DIVISION 1 HAZARDOUS LOCATIONS.

SECTION: A - PUMP SPECIFICATIONS: 6SHMN, 6SHMH & 6SHMJ (Enclosed Monovane) Pump Models

DISCHARGE ..... 6”, 125 lb. Horizontal Flange Slotted to accomodate 150mm ISO Flanges
LIQUID TEMPERATURE ... 104°F (40°C) Continuous
VOLUTE ..... Cast Iron ASTM A-48, Class 30
WEAR RING..... C954 Lead-Free Bronze
MOTOR HOUSING..... Cast Iron ASTM A-48, Class 30
SEAL PLATE ..... Cast Iron ASTM A-48, Class 30
IMPELLER:
Design..... Enclosed Monovane, With Pump Out Vanes on Back Side. Dynamically Balanced ISO G6.3
Material ..... Ductile Iron ASTM A-536, 65-45-12
SHAFT ..... 416 Stainless Steel
“O” RINGS..... Buna-N
HARDWARE ..... 300 Series Stainless Steel
LIFTING BALL..... 300 Series Stainless Steel
PAINT ..... Epoxy Dupont Corlar® Amine Epoxy, Two Coats
SEAL: *Design* ..... Tandem Mechanical, Oil Filled Reservoir.
Material: Inboard.... Rotating Face - Carbon Stationary Face - Ceramic
Material: Outboard. Rotating Face - Silicon Carbide Stationary Face - Silicon Carbide Elastomer - Buna-N (Both Seals) Hardware - 300 Series Stainless (Both Seals)
CORD ENTRY..... Custom Molded, Quick Connected for Sealing and Strain Relief
POWER CORD ..... CSA Certified Submersible Power Cable 2000V - Ordered Separately
SPEED ..... 1750 & 1150 RPM (Nominal)
UPPER BEARING:
Design ..... Single Row, Ball, Oil Lubricated
Load ..... Radial
LOWER BEARING:
Design ..... Double Row, Ball, Oil Lubricated
Load..... Radial & Thrust
MOTOR: *Design* ..... NEMA B Three Phase Torque Curve. Oil-Filled, Squirrel Cage Induction, Inverter duty rated per NEMA MG-1 part 31
Insulation..... Class H, Varnish & Magnet Wire
THREE PHASE..... Dual Voltage 230/460V up to 20 HP, 460V only 25 & 30 HP & 575V; Requires Overload Protection to be included in control panel.
MOISTURE SENSOR ..... Normally Open (N/O) with 330 K-Ohm Test Resistor Across Probes. Requires Relay in Control Panel
TEMPERATURE SENSOR .. Three Normally Closed (N/C). To be wired in series with contactor control circuit
OPTIONAL EQUIPMENT.. Seal Material, Impeller Trims, Cord Length, Leg Kit (p/n 125506)
MARKINGS..... CSA, CE
WEIGHT ..... 558 Pounds (253 Kg)
NOISE EMISSION MAX.... In-Air 64 dB-A
SUBMERGENCE ..... Max Depth 66ft (20m)

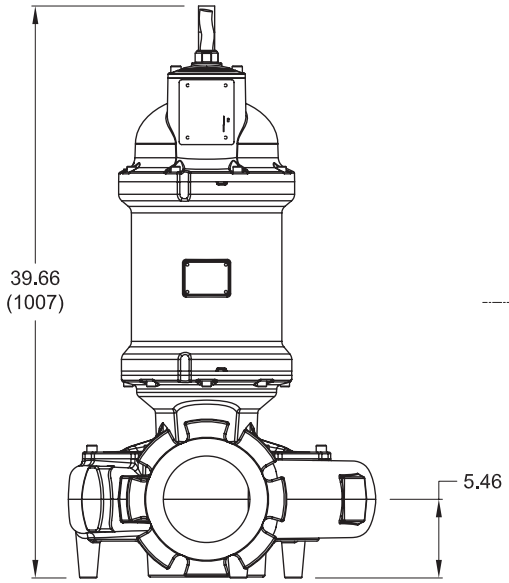

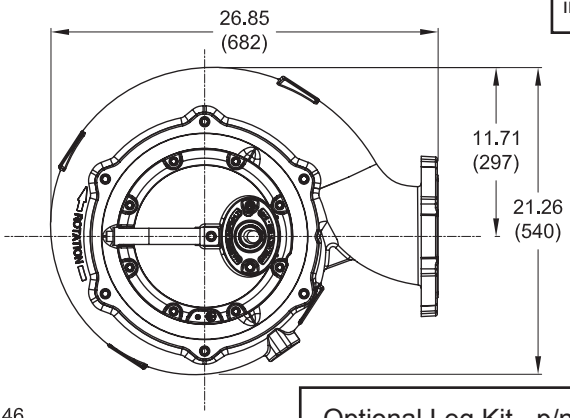

Dimensions inches (mm)

Optional Leg Kit - p/n 125506

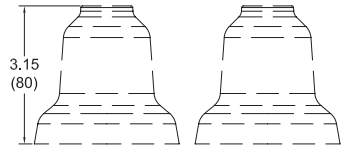

IMPORTANT !

1.) MOISTURE AND TEMPERATURE SENSORS MUST BE CONNECTED TO VALIDATE THE CSA LISTING.
2.) A SPECIAL MOISTURE SENSOR RELAY IS REQUIRED IN THE CONTROL PANEL FOR PROPER OPERATION OF THE MOISTURE SENSORS. CONTACT BARNES PUMPS FOR INFORMATION CONCERNING MOISTURE SENSING RELAYS FOR CUSTOMER SUPPLIED CONTROL PANELS.
3.) THESE PUMPS ARE CSA LISTED FOR PUMPING WATER AND WASTEWATER. **DO NOT USE TO PUMP FLAMMABLE LIQUIDS**.
4.) INSTALLATIONS SUCH AS DECORATIVE FOUNTAINS OR WATER FEATURES PROVIDED FOR VISUAL ENJOYMENT MUST BE INSTALLED IN ACCORDANCE WITH THE NATIONAL ELECTRIC CODE ANSI/NFPA 70 AND/OR THE AUTHORITY HAVING JURISDICTION. THIS PUMP IS NOT INTENDED FOR USE IN SWIMMING POOLS, RECREATIONAL WATER PARKS, OR INSTALLATIONS IN WHICH HUMAN CONTACT WITH PUMPED MEDIA IS A COMMON OCCURRENCE.
5.) THIS PUMP IS NOT APPROPRIATE FOR THOSE APPLICATIONS SPECIFIED AS CLASS 1 DIVISION 1 HAZARDOUS LOCATIONS.

SECTION: A - PUMP SPECIFICATIONS: 6SHDK (Enclosed Dual Vane) Pump Models

DISCHARGE ..... 6”, 125 lb. Horizontal Flange Slotted to accomodate 150mm ISO Flanges
LIQUID TEMPERATURE ... 104°F (40°C) Continuous
VOLUTE ..... Cast Iron ASTM A-48, Class 30
WEAR RING..... C954 Lead-Free Bronze
MOTOR HOUSING..... Cast Iron ASTM A-48, Class 30
SEAL PLATE ..... Cast Iron ASTM A-48, Class 30
IMPELLER:
Design..... Enclosed Dual Vane, With Pump Out Vanes on Back Side. Dynamically Balanced ISO G6.3
Material ..... Ductile Iron ASTM A-536, 65-45-12
SHAFT ..... 416 Stainless Steel
“O” RINGS..... Buna-N
HARDWARE ..... 300 Series Stainless Steel
LIFTING BALL..... 300 Series Stainless Steel
PAINT ..... Epoxy Dupont Corlar® Amine Epoxy, Two Coats
SEAL: *Design* ..... Tandem Mechanical, Oil Filled Reservoir.
Material: Inboard.... Rotating Face - Carbon Stationary Face - Ceramic
Material: Outboard. Rotating Face - Silicon Carbide Stationary Face - Silicon Carbide Elastomer - Buna-N (Both Seals) Hardware - 300 Series Stainless (Both Seals)
CORD ENTRY..... Custom Molded, Quick Connected for Sealing and Strain Relief
POWER CORD ..... CSA Certified Submersible Power Cable 2000V - Ordered Separately
SPEED ..... 1750 & 1150 RPM (Nominal)
UPPER BEARING:
Design ..... Single Row, Ball, Oil Lubricated
Load ..... Radial
LOWER BEARING:
Design ..... Double Row, Ball, Oil Lubricated
Load..... Radial & Thrust
MOTOR: *Design* ..... NEMA B Three Phase Torque Curve. Oil-Filled, Squirrel Cage Induction, Inverter duty rated per NEMA MG-1 part 31
Insulation..... Class H, Varnish & Magnet Wire
THREE PHASE..... Dual Voltage 230/460V up to 20 HP, 460V only 25 & 30 HP & 575V; Requires Overload Protection to be included in control panel.
MOISTURE SENSOR ..... Normally Open (N/O) with 330 K-Ohm Test Resistor Across Probes. Requires Relay in Control Panel
TEMPERATURE SENSOR .. Three Normally Closed (N/C). To be wired in series with contactor control circuit
OPTIONAL EQUIPMENT.. Seal Material, Impeller Trims, Cord Length, Leg Kit (p/n 125506)
MARKINGS..... CSA, CE
WEIGHT ..... 558 Pounds (253 Kg)
NOISE EMISSION MAX.... In-Air 64 dB-A
SUBMERGENCE ..... Max Depth 66ft (20m)

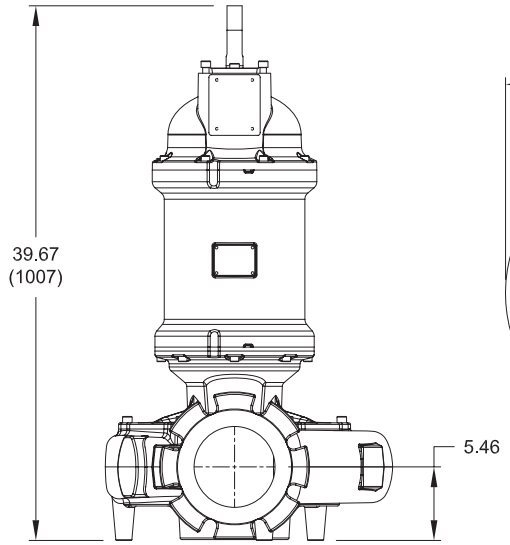

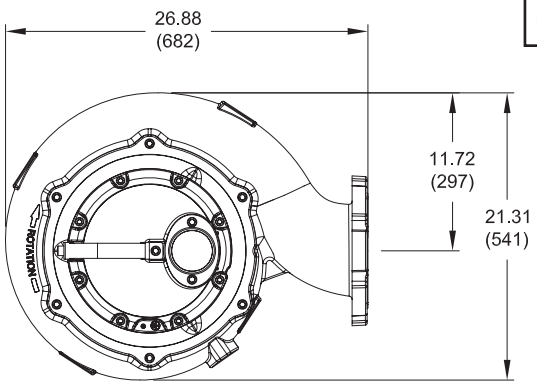

Dimensions inches (mm)

Optional Leg Kit - p/n 125506

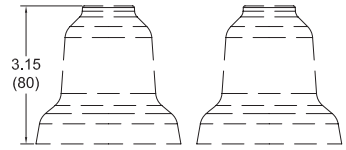

IMPORTANT !

1.) MOISTURE AND TEMPERATURE SENSORS MUST BE CONNECTED TO VALIDATE THE CSA LISTING.
2.) A SPECIAL MOISTURE SENSOR RELAY IS REQUIRED IN THE CONTROL PANEL FOR PROPER OPERATION OF THE MOISTURE SENSORS. CONTACT BARNES PUMPS FOR INFORMATION CONCERNING MOISTURE SENSING RELAYS FOR CUSTOMER SUPPLIED CONTROL PANELS.
3.) THESE PUMPS ARE CSA LISTED FOR PUMPING WATER AND WASTEWATER. **DO NOT USE TO PUMP FLAMMABLE LIQUIDS**.
4.) INSTALLATIONS SUCH AS DECORATIVE FOUNTAINS OR WATER FEATURES PROVIDED FOR VISUAL ENJOYMENT MUST BE INSTALLED IN ACCORDANCE WITH THE NATIONAL ELECTRIC CODE ANSI/NFPA 70 AND/OR THE AUTHORITY HAVING JURISDICTION. THIS PUMP IS NOT INTENDED FOR USE IN SWIMMING POOLS, RECREATIONAL WATER PARKS, OR INSTALLATIONS IN WHICH HUMAN CONTACT WITH PUMPED MEDIA IS A COMMON OCCURRENCE.
5.) THIS PUMP IS NOT APPROPRIATE FOR THOSE APPLICATIONS SPECIFIED AS CLASS 1 DIVISION 1 HAZARDOUS LOCATIONS.

SECTION B: GENERAL INFORMATION

B-1) To the Purchaser:
Congratulations! You are the owner of one of the finest pumps on the market today. CP&S pumps are products engineered and manufactured of high quality components. Over one hundred years of pump building experience along with a continuing quality assurance program combine to produce a pump which will stand up to the toughest applications. This manual will provide helpful information concerning installation, maintenance, and proper service guidelines.

B-2) Receiving:
Upon receiving the pump, it should be inspected for damage or shortages. If damage has occurred, file a claim immediately with the company that delivered the pump. **MAKE CERTAIN TO RETAIN THIS MANUAL!**

B-3) Storage:
Short Term- CP&S Pumps are manufactured for efficient performance following short inoperative periods in storage. For best results, pumps can be retained in storage, as factory assembled, in a dry atmosphere with constant temperatures for up to six (6) months.

Long Term - Any length of time exceeding six (6) months, but not more than twenty-four (24) months. The unit should be stored in a temperature controlled area, a roofed over walled enclosure that provides protection from the elements (rain, snow, wind-blown dust, etc.), and whose temperature can be maintained between +40 deg. F and +120 deg. F. (4.4 - 49°C). Pump should be stored in its original shipping container. On initial start up, rotate impeller by hand to assure seal and impeller rotate freely. If it is required that the pump be installed and tested before the long term storage begins, such installation will be allowed provided:

1.) The pump is not installed under water for more than one (1) month.
2.) Immediately upon satisfactory completion of the test, the pump is removed, thoroughly dried, repacked in the original shipping container, and placed in a temperature controlled storage area.

B-4) Service Centers:
For the location of the nearest Barnes Service Center, check your Barnes representative or Crane Pumps & Systems, Inc., Service Department in Piqua, Ohio, telephone (937) 778-8947 or Crane Pumps & Systems Canada, in Brampton, Ontario, (905) 457-6223.

SECTION C: INSTALLATION

C-1) Location:
These self-contained pumping units are recommended for use in a sump, lift station or basin. This pump is designed for submerged continuous duty (15 minutes duty in air at nameplate horsepower), pumping sewage, effluent, wastewater or other nonexplosive or noncorrosive liquids not above 104°F (40°C). Never install the pump in a trench, ditch or hole with a dirt bottom; the legs will sink into the dirt and the suction will become plugged.

C-1.1) Submergence:
It is recommended that the pump be operated in the Continuous Duty Submergence condition and the sump liquid level should never be less than the Minimum Submergence Level (See Fig. 1). The time required to draw the well down from top of motor to the minimum submergence level should not be greater than 15 minutes.
NOTE: Outer shaft seal must be in liquid when motor is operated, whether motor is submerged or in air.

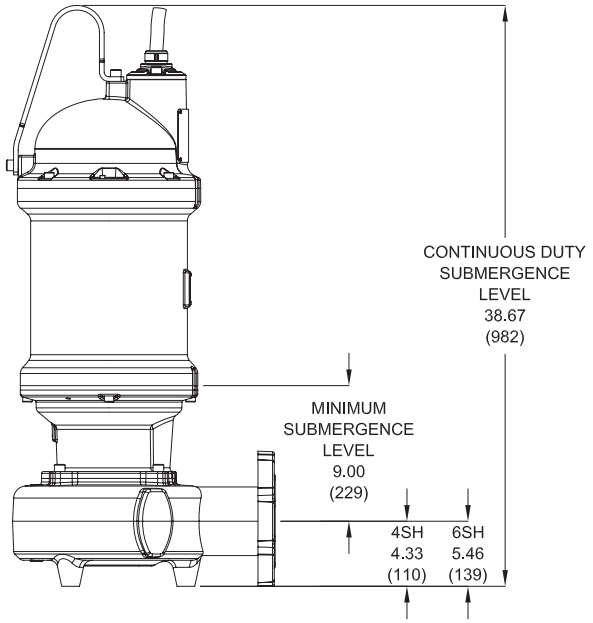

FIGURE 1

C-2) Discharge:
Discharge piping should be as short as possible. Both a check valve and a shut-off valve are recommended for each pump being used. The check valve is used to prevent backflow into the sump. Excessive backflow can cause flooding and/or damage to the pump. The shut-off valve is used to stop system flow during pump or check valve servicing.

Barnes Pumps manufactures a break away fitting discharge system designed to allow the submersible wastewater pump to be installed or removed without requiring personnel to enter the wet well. Place the Break Away Fitting (BAF) in position. Temporarily secure the guide rails in the upper mounting brackets and locate the base elbow on the bottom of the wet well. Level the base elbow with grout and/or shims. Install the intermediate support brackets, if required. Make sure the rails are in a true vertical position so the pump will clear the access opening and will slide freely down the rails into place on the discharge base elbow. Once the rails are in proper alignment, bolt the base elbow into the floor of the station and connect the discharge pipe to the elbow. Connect the movable portion and other supplied fittings of the BAF onto the pump and lower into wet well. See the Break Away Fitting manual for more information.

C-3) Liquid Level Controls:
It is recommended to use a liquid level control system that allows the on and off point to be separated by at least twelve inches. An additional set point (lag point) should be incorporated with an alternator switching system for a duplex (two pump) station. A high level alarm may be required to alert maintenance personnel that there is a high water situation in the wet well should the output of the pump station drop below the inflow rate. A low level cut off may be installed to provide system shutdown if the main level control system malfunctions. The off point should be positioned so that the liquid level never drops below the minimum continuous duty point for the pump shown in figure 1.

C-4.1) Electrical Connections:

WARNING! - All model pumps and control panels must be properly grounded per the NATIONAL ELECTRIC CODE or CANADIAN ELECTRIC CODE, State, Province and local codes. Improper grounding voids warranty.

C-4) Power/Control Cord:
The power/control cord used with pump has a patent pending “quick disconnect” feature that allows the cord to be easily attached and disconnected at the pump. The maximum amperage rating for the cord is cast in the top of the cast stainless mounting plate. The voltage connection for the motor is determined by the cord assembly used. Low voltage cords (208 & 230 Volt) utilize a molded quick connect plug that is colored black. High voltage cords (460 & 575 Volt) utilize a molded quick connect cord that is colored orange. **It is important to verify that the cord being used is rated for the nameplate voltage and amperage rating shown on the pump nameplate. Refer to Chart on page 7.** No internal wiring adjustments are necessary for dual and tri-voltage pumps. All jumper connections to set the proper voltage are made by the cord plug itself.

A flat alignment mark is molded into the plug and mating socket on the pump. These should be used as a visual indication as to the correct orientation of the plug. Insert the plug into the pump and install the two 12 mm socket head cap screws into the clamping plate. Slowly tighten the two screws alternating back and forth until the clamping plate is drawn down flush to the top of the cord boss on the pump. The two screws should be torqued until the plate is down to a point where **metal to metal** contact is made between the stainless steel plate and pump housing. (See Fig. 2)

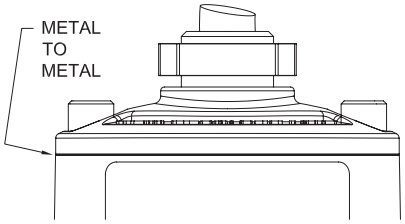

FIGURE 2a

The cord assembly mounted to the pump must not be modified in any way except for shortening to a specific application. Any splice between the pump and the control panel must be made in accordance with all applicable electric codes. It is recommended that a junction box (if used) be mounted outside the sump or be of at least Nema 6 or 6P construction with NEMA 6 or 6P watertight cord grips if located within the wet well. A water and vapor tight seal fitting **MUST** be used in conduit leaving the wet well to prevent moisture and gasses from reaching the control panel. Prior to installation, the pump power cable should be inspected for nicks or damage. If damaged, the cord should be replaced before installation.

DO NOT USE THE POWER CORD TO LIFT PUMP.

C-4.1) Electrical Connections:
When the electrical connections are made, the lead wires from the power cable should be stripped so that the ground wire is at least two inches longer than the power leads. This will ensure that if the cable is inadvertently pulled out of the connection point, the ground wire will be the last lead to break the circuit.

C-4.2) Wire Size:
If additional cable is required consult a qualified electrician for proper wire size. Voltage drop due to wire resistance between the pump and power connection point should be limited to 3% when additional cable is added.

WARRANTY NOTE:
Both the temperature sensor and moisture detection system must be connected to the motor circuitry such that the motor will be de-energized or sound alarm if excessive motor temperatures are reached and/or if water is detected in the seal chamber and/or motor chamber. Failure to have the above mentioned systems installed and operative, nullifies warranty.

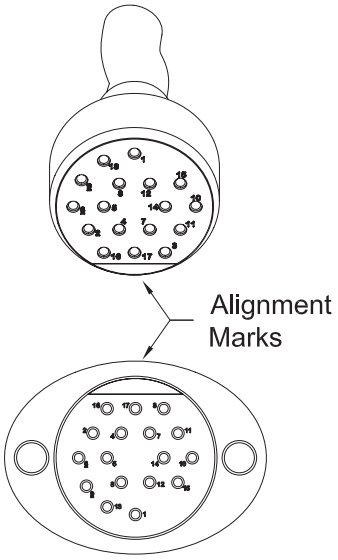

FIGURE 2b

	MODEL NO	PART NO	HP	VOLT	PH	Hz	RPM (Nom)	NEMA START CODE	FULL LOAD AMPS	1.2 SERVICE FACTOR AMPS	LOCKED ROTOR AMPS	CORD P/N	CORD SIZE	CORD O.D.	WINDING RESISTANCE
4SHVA Pump	4SHVA75N2	127442	7.5	208	3	60	3450	K	35.5-32.1/16.1	38.8-35.1/17.5	195.7/88.5	125498	8/4 - 18/4	1.12 ± .02	.247/.988
				230								125498	8/4 - 18/4	1.12 ± .02	
				460								125497	12/4 - 18/4	.87 ± .02	
	4SHVA7552	127443	7.5	575	3	60	3450	K	12.9	14.0	70.8	125497	12/4 - 18/4	.87 ± .02	1.61
	4SHVA100N2	127444	10.0	208	3	60	3450	H	41.1-37.1/18.6	45.9-41.6/20.8	195.7/88.5	125498	8/4 - 18/4	1.12 ± .02	.247/.988
				230								125498	8/4 - 18/4	1.12 ± .02	
				460								125497	12/4 - 18/4	.87 ± .02	
	4SHVA10052	127445	10.0	575	3	60	3450	H	14.9	16.6	70.8	125497	12/4 - 18/4	.87 ± .02	1.61
	4SHVA150N2	127446	15.0	208	3	60	3450	E	54.1-48.9/24.4	59.0-57.1/28.5	195.7/88.5	125498	8/4 - 18/4	1.12 ± .02	.247/.988
				230								125498	8/4 - 18/4	1.12 ± .02	
				460								125497	12/4 - 18/4	.87 ± .02	
	4SHVA15052	127447	15.0	575	3	60	3450	E	19.5	22.8	70.8	125497	12/4 - 18/4	.87 ± .02	1.61
	4SHVA20082	127448	20.0	230	3	60	3450	J	50.8/25.4	59.0/29.7	189.0	125498	8/4 - 18/4	1.12 ± .02	.089/.356
				460								125497	12/4 - 18/4	.87 ± .02	
	4SHVA20052	127449	20.0	575	3	60	3450	J	20.3	23.8	151.2	125497	12/4 - 18/4	.87 ± .02	.545
	4SHVA25042	127450	25.0	460	3	60	3450	G	30.8	36.7	189.0	125499	8/4 - 18/4	1.12 ± .02	.356
	4SHVA25052	127451	25.0	575	3	60	3450	G	24.6	29.4	151.2	125497	12/4 - 18/4	.87 ± .02	.545
	4SHVA30042	127452	30.0	460	3	60	3450	F	36.7	44.3	189.0	125499	8/4 - 18/4	1.12 ± .02	.356
	4SHVA30052	127453	30.0	575	3	60	3450	F	29.4	35.4	151.2	125499	8/4 - 18/4	1.12 ± .02	.545
4SHVB Pump	4SHVB75N2	127490	7.5	208	3	60	3450	K	35.5-32.1/16.1	38.8-35.1/17.5	195.7/88.5	125498	8/4 - 18/4	1.12 ± .02	.247/.988
				230								125498	8/4 - 18/4	1.12 ± .02	
				460								125497	12/4 - 18/4	.87 ± .02	
	4SHVB7552	127491	7.5	575	3	60	3450	K	12.9	14.0	70.8	125497	12/4 - 18/4	.87 ± .02	1.61
	4SHVB100N2	127492	10.0	208	3	60	3450	H	41.1-37.1/18.6	45.9-41.6/20.8	195.7/88.5	125498	8/4 - 18/4	1.12 ± .02	.247/.988
				230								125498	8/4 - 18/4	1.12 ± .02	
				460								125497	12/4 - 18/4	.87 ± .02	
	4SHVB10052	127493	10.0	575	3	60	3450	H	14.9	16.6	70.8	125497	12/4 - 18/4	.87 ± .02	1.61
	4SHVB150N2	127494	15.0	208	3	60	3450	E	54.1-48.9/24.4	59.0-57.1/28.5	195.7/88.5	125498	8/4 - 18/4	1.12 ± .02	.247/.988
				230								125498	8/4 - 18/4	1.12 ± .02	
				460								125497	12/4 - 18/4	.87 ± .02	
	4SHVB15052	127495	15.0	575	3	60	3450	E	19.5	22.8	70.8	125497	12/4 - 18/4	.87 ± .02	1.61
	4SHVB20082	127496	20.0	230	3	60	3450	J	50.8/25.4	59.0/29.7	189.0	125498	8/4 - 18/4	1.12 ± .02	.089/.356
				460								125497	12/4 - 18/4	.87 ± .02	
	4SHVB20052	127497	20.0	575	3	60	3450	J	20.3	23.8	151.2	125497	12/4 - 18/4	.87 ± .02	.545
	4SHVB25042	127498	25.0	460	3	60	3450	G	30.8	36.7	189.0	125499	8/4 - 18/4	1.12 ± .02	.356
	4SHVB25052	127499	25.0	575	3	60	3450	G	24.6	29.4	151.2	125497	12/4 - 18/4	.87 ± .02	.545
	4SHVB30042	127500	30.0	460	3	60	3450	F	36.7	44.3	189.0	125499	8/4 - 18/4	1.12 ± .02	.356
	4SHVB30052	127501	30.0	575	3	60	3450	F	29.4	35.4	151.2	125499	8/4 - 18/4	1.12 ± .02	.545

Moisture and Temperature sensor leads are integral to power cord.

***** CORD ORDERED SEPARATELY *****

Winding Resistance ± 7.5% Winding resistance measured in OHMS @ 25°C (Between Lines) at motor leads.

Pump rated for operation at ± 10% voltage at motor.

Cord Suffix: XF - 50 Feet, XJ - 75 Feet, or XL - 100 Feet

	MODEL NO	PART NO	HP	VOLT	PH	Hz	RPM (Nom)	NEMA START CODE	FULL LOAD AMPS	1.2 SERVICE FACTOR AMPS	LOCKED ROTOR AMPS	CORD P/N	CORD SIZE	CORD O.D.	WINDING RESISTANCE
4SHMC Pump	4SHMC75N4	130026	7.5	208	3	60	1750	M	35.9 - 32.4/16.2	38.5 - 34.8/17.4	206.6/103.3	125498	8/4 - 18/4	1.12 ± .02	.187/.748
				230								125498	8/4 - 18/4	1.12 ± .02	
				460								125497	12/4 - 18/4	.87 ± .02	
	4SHMC7554	130027	7.5	575	3	60	1750	M	13.0	13.9	82.6	125497	12/4 - 18/4	.87 ± .02	1.16
	4SHMC100N4	130028	10.0	208	3	60	1750	K	40.4 - 36.5/18.3	44.6 - 40.3/20.2	206.6/103.3	125498	8/4 - 18/4	1.12 ± .02	.187/.748
				230								125498	8/4 - 18/4	1.12 ± .02	
				460								125497	12/4 - 18/4	.87 ± .02	
	4SHMC10054	130029	10.0	575	3	60	1750	K	14.6	16.1	82.6	125497	12/4 - 18/4	.87 ± .02	1.16
	4SHMC150N4	130030	15.0	208	3	60	1750	F	51.8 - 46.9/23.4	59.0 - 54.3/27.2	206.6/103.3	125498	8/4 - 18/4	1.12 ± .02	.187/.748
				230								125498	8/4 - 18/4	1.12 ± .02	
				460								125497	12/4 - 18/4	.87 ± .02	
	4SHMC15054	130031	15.0	575	3	60	1750	F	18.7	21.7	82.6	125497	12/4 - 18/4	.87 ± .02	1.16
4SHMD Pump	4SHMD150N4	130032	15.0	208	3	60	1750	F	51.8 - 46.9/23.4	59.0 - 54.3/27.2	206.6/103.3	125498	8/4 - 18/4	1.12 ± .02	.084/.337
				230								125498	8/4 - 18/4	1.12 ± .02	
				460								125497	12/4 - 18/4	.87 ± .02	
	4SHMD15054	130033	15.0	575	3	60	1750	F	18.7	21.7	82.6	125497	12/4 - 18/4	.87 ± .02	.510
	4SHMD20084	130034	20.0	230	3	60	1750	J	53.7/26.9	59.0/29.9	383.8/191.9	125498	8/4 - 18/4	1.12 ± .02	.084/.337
				460								125497	12/4 - 18/4	.87 ± .02	
	4SHMD20054	130035	20.0	575	3	60	1750	J	21.5	23.9	153.5	125497	12/4 - 18/4	.87 ± .02	.510
	4SHMD25044	130037	25.0	460	3	60	1750	G	33.2	38.9	191.9	125499	8/4 - 18/4	1.12 ± .02	.337
	4SHMD25054	130038	25.0	575	3	60	1750	G	26.6	31.1	153.5	125497	12/4 - 18/4	.87 ± .02	.510
	4SHMD30044	130040	30.0	460	3	60	1750	F	38.9	45.9	191.9	125499	8/4 - 18/4	1.12 ± .02	.337
	4SHMD30054	130041	30.0	575	3	60	1750	F	31.1	36.7	153.5	125499	8/4 - 18/4	1.12 ± .02	.510

Moisture and Temperature sensor leads are integral to power cord.

***** CORD ORDERED SEPARATELY *****

Winding Resistance ± 7.5% Winding resistance measured in OHMS @ 25°C (Between Lines) at motor leads.

Pump rated for operation at ± 10% voltage at motor.

Cord Suffix: XF - 50 Feet, XJ - 75 Feet, or XL - 100 Feet

	MODEL NO	PART NO	HP	VOLT	PH	Hz	RPM (Nom)	NEMA START CODE	FULL LOAD AMPS	1.2 SERVICE FACTOR AMPS	LOCKED ROTOR AMPS	CORD P/N *	CORD SIZE	CORD O.D.	WINDING RESISTANCE
4SHDG Pump	4SHDG75N4	132170	7.5	208	3	60	1750	M	35.9	38.5	206.6	125498	8/4 - 18/4	1.12 ± .02	.187/.748
				230					32.4	34.8					
				460					16.2	17.4	103.3	125497	12/4 - 18/4	.87 ± .02	
	4SHDG7554	132171	7.5	575	3	60	1750	M	13.0	13.9	82.6	125497	12/4 - 18/4	.87 ± .02	1.16
	4SHDG100N4	132172	10.0	208	3	60	1750	K	40.4	44.6	206.6	125498	8/4 - 18/4	1.12 ± .02	.187/.748
				230					36.5	40.3					
				460					18.3	20.2	103.3	125497	12/4 - 18/4	.87 ± .02	
	4SHDG10054	132173	10.0	575	3	60	1750	K	14.6	16.1	82.6	125497	12/4 - 18/4	.87 ± .02	1.16
	4SHDG150N4	132174	15.0	208	3	60	1750	E	51.8	59.0	206.6	125498	8/4 - 18/4	1.12 ± .02	.187/.748
				230					46.9	54.3					
				460					23.4	27.2	103.3	125497	12/4 - 18/4	.87 ± .02	
	4SHDG15054	132175	15.0	575	3	60	1750	E	18.7	21.7	82.6	125497	12/4 - 18/4	.87 ± .02	1.16
	4SHDG20084	132177	20.0	230	3	60	1750	J	53.7	59.0	383.9	125498	8/4 - 18/4	1.12 ± .02	.084/.337
				460					26.9	29.9		125497	12/4 - 18/4	.87 ± .02	
	4SHDG20054	132178	20.0	575	3	60	1750	J	21.5	23.9	153.5	125497	12/4 - 18/4	.87 ± .02	.510
4SHDI Pump	4SHDI20084	130982	20	230	3	60	1750	J	53.7	59.0	383.9	125498	8/4 - 18/4	1.12 ± .02	.084/.337
				460					26.9	29.9		125497	12/4 - 18/4	.87 ± .02	
	4SHDI20054	130983	20	575	3	60	1750	J	21.5	23.9	153.5	125497	12/4 - 18/4	.87 ± .02	.510
	4SHDI25044	130597	25	460	3	60	1750	G	33.2	38.9	191.9	125499	8/4 - 18/4	1.12 ± .02	.337
	4SHDI25054	130598	25	575	3	60	1750	G	26.6	31.1	153.5	125497	12/4 - 18/4	.87 ± .02	.510
	4SHDI30044	130600	30	460	3	60	1750	F	38.9	45.9	191.9	125499	8/4 - 18/4	1.12 ± .02	.337
	4SHDI30054	130601	30	575	3	60	1750	F	31.1	36.7	153.5	125499	8/4 - 18/4	1.12 ± .02	.510

Moisture and Temperature sensor leads are integral to power cord.

***** CORD ORDERED SEPARATELY *****

Winding Resistance ± 7.5% Winding resistance measured in OHMS @ 25°C (Between Lines) at motor leads.

Pump rated for operation at ± 10% voltage at motor.

Cord Suffix: XF - 50 Feet, XJ - 75 Feet, or XL - 100 Feet

	MODEL NO	PART NO	HP	VOLT	PH	Hz	RPM (Nom)	NEMA START CODE	FULL LOAD AMPS	1.2 SERVICE FACTOR AMPS	LOCKED ROTOR AMPS	CORD P/N *	CORD SIZE	CORD O.D.	WINDING RESISTANCE
6SHVL Pump	6SHVL20084	132258	20.0	230	3	60	1750	J	53.7	59.0	383.9	125498	8/4 - 18/4	1.12 ± .02	.084/.337
				460					26.9	29.9		125497	12/4 - 18/4	.87 ± .02	
	6SHVL20054	132259	20.0	575	3	60	1750	J	21.5	23.9	153.5	125497	12/4 - 18/4	.87 ± .02	.510
	6SHVL25044	132261	25.0	460	3	60	1750	G	33.2	38.9	191.9	125499	8/4 - 18/4	1.12 ± .02	.337
	6SHVL25054	132262	25.0	575	3	60	1750	G	26.6	31.1	153.5	125497	12/4 - 18/4	.87 ± .02	.510
	6SHVL30044	132264	30.0	460	3	60	1750	F	38.9	45.9	191.9	125499	8/4 - 18/4	1.12 ± .02	.337
	6SHVL30054	132265	30.0	575	3	60	1750	F	31.1	36.7	153.5	125499	8/4 - 18/4	1.12 ± .02	.510
	6SHVL75N6	132273	7.5	208	3	60	1150	J	24.9	29.6	137.6	125498	12/4 - 18/4	.87 ± .02	.329
				230					24.0	27.6					
				460					12.0	13.8	68.8	125497	12/4 - 18/4	.87 ± .02	1.315
	6SHVL7556	132274	7.5	575	3	60	1150	J	9.6	11.0	55.0	125497	12/4 - 18/4	.87 ± .02	1.960
	6SHVL100N6	132275	10.0	208	3	60	1150	F	32.9	41.0	137.6	125498	8/4 - 18/4	1.12 ± .02	.329
				230					30.2	35.8					
				460					15.1	17.9	68.8	125497	12/4 - 18/4	.87 ± .02	1.315
	6SHVL10056	132276	10.0	575	3	60	1150	F	12.1	14.3	55.0	125497	12/4 - 18/4	.87 ± .02	1.960
	6SHVL150N6	132277	15.0	208	3	60	1150	H	47.0	56.8	248.6	125498	8/4 - 18/4	1.12 ± .02	.151
				230					44.1	51.4					
				460					22.0	25.7	124.3	125497	12/4 - 18/4	.87 ± .02	.603
	6SHVL15056	132278	15.0	575	3	60	1150	H	17.6	20.6	99.4	125497	12/4 - 18/4	.87 ± .02	.934
	6SHVL20046	132280	20.0	460	3	60	1150	E	28.6	34.9	248.6	125499	8/4 - 18/4	1.12 ± .02	.603
	6SHVL20056	132281	20.0	575	3	60	1150	E	22.9	27.9	99.4	125497	12/4 - 18/4	.87 ± .02	.934

Moisture and Temperature sensor leads are integral to power cord.

***** CORD ORDERED SEPARATELY *****

Winding Resistance ± 7.5% Winding resistance measured in OHMS @ 25°C (Between Lines) at motor leads.

Pump rated for operation at ± 10% voltage at motor.

Cord Suffix: XF - 50 Feet, XJ - 75 Feet, or XL - 100 Feet

	MODEL NO	PART NO	HP	VOLT	PH	Hz	RPM (Nom)	NEMA START CODE	FULL LOAD AMPS	1.2 SERVICE FACTOR AMPS	LOCKED ROTOR AMPS	CORD P/N *	CORD SIZE	CORD O.D.	WINDING RESISTANCE
6SHMN Pump	6SHMN150N4	132186	15.0	208	3	60	1750	E	51.8	59.0	206.6	125498	8/4 - 18/4	1.12 ± .02	.084/.337
				230			1750		46.9	54.3					
				460			1750		23.4	27.2	103.3	125497	12/4 - 18/4	.87 ± .02	
	6SHMN15054	132187	15.0	575	3	60	1750	E	18.7	21.7	82.6	125497	12/4 - 18/4	.87 ± .02	.510
	6SHMN20084	132189	20.0	230	3	60	1750	J	53.7	59.0	383.9	125498	8/4 - 18/4	1.12 ± .02	.084/.337
				460			1750		26.9	29.9		125497	12/4 - 18/4	.87 ± .02	
	6SHMN20054	132190	20.0	575	3	60	1750	J	21.5	23.9	153.5	125497	12/4 - 18/4	.87 ± .02	.510
	6SHMN25044	132192	25.0	460	3	60	1750	G	33.2	38.9	191.9	125499	8/4 - 18/4	1.12 ± .02	.337
	6SHMN25054	132193	25.0	575	3	60	1750	G	26.6	31.1	153.5	125497	12/4 - 18/4	.87 ± .02	.510
	6SHMN75N6	132204	7.5	208	3	60	1150	J	24.9	29.6	137.6	125498	12/4 - 18/4	.87 ± .02	.329
				230					24.0	27.6					
				460					12.0	13.8	68.8	125497		.87 ± .02	1.315
	6SHMN7556	132205	7.5	575	3	60	1150	J	9.6	11.0	55.0	125497	12/4 - 18/4	.87 ± .02	1.960
6SHMH Pump	6SHMH30044	132195	30.0	460	3	60	1750	F	38.9	45.9	191.9	125499	8/4 - 18/4	1.12 ± .02	.337
	6SHMH30054	132196	30.0	575	3	60	1750	F	31.1	36.7	153.5	125499	8/4 - 18/4	1.12 ± .02	.510
	6SHMH100N6	132206	10.0	208	3	60	1150	F	32.9	41.0	137.6	125498	8/4 - 18/4	1.12 ± .02	.329
				230					30.2	35.8					
				460					15.1	17.9	68.8	125497	12/4 - 18/4	.87 ± .02	1.315
	6SHMH10056	132207	10.0	575	3	60	1150	F	12.1	14.3	55.0	125497	12/4 - 18/4	.87 ± .02	1.960
	6SHMH150N6	132176	15.0	208	3	60	1150	H	47.0	56.8	248.6	125498	8/4 - 18/4	1.12 ± .02	.151
				230					44.1	51.4					
				460					22.0	25.7	124.3	125497	12/4 - 18/4	.87 ± .02	.603
	6SHMH15056	132181	15.0	575	3	60	1150	H	17.6	20.6	99.4	125497	12/4 - 18/4	.87 ± .02	.934
6SHMJ Pump	6SHMJ150N6	132208	15.0	208	3	60	1150	H	47.0	56.8	248.6	125498	8/4 - 18/4	1.12 ± .02	.151
				230					44.1	51.4					
				460					22.0	25.7	124.3	125497	12/4 - 18/4	.87 ± .02	.603
	6SHMJ15056	132209	15.0	575	3	60	1150	H	17.6	20.6	99.4	125497	12/4 - 18/4	.87 ± .02	.934
	6SHMJ20046	132211	20.0	460	3	60	1150	E	28.6	34.9	248.6	125499	8/4 - 18/4	1.12 ± .02	.603
	6SHMJ20056	132212	20.0	575	3	60	1150	E	22.9	27.9	99.4	125497	12/4 - 18/4	.87 ± .02	.934

Moisture and Temperature sensor leads are integral to power cord.

Winding Resistance ± 7.5% Winding resistance measured in OHMS @ 25°C (Between Lines) at motor leads.

Pump rated for operation at ± 10% voltage at motor.

Cord Suffix: XF - 50 Feet, XJ - 75 Feet, or XL - 100 Feet

***** CORD ORDERED SEPARATELY *****

	MODEL NO	PART NO	HP	VOLT	PH	Hz	RPM (Nom)	NEMA START CODE	FULL LOAD AMPS	1.2 SERVICE FACTOR AMPS	LOCKED ROTOR AMPS	CORD P/N *	CORD SIZE	CORD O.D.	WINDING RESISTANCE
6SHDK Pump	6SHDK25044	132225	25	460	3	60	1750	G	33.2	38.9	191.9	125499	8/4 - 18/4	1.12 ± .02	.337
	6SHDK25054	132226	25	575	3	60	1750	G	26.6	31.1	153.5	125497	12/4 - 18/4	.87 ± .02	.510
	6SHDK30044	132228	30	460	3	60	1750	F	38.9	45.9	191.9	125499	8/4 - 18/4	1.12 ± .02	.337
	6SHDK30054	132229	30	575	3	60	1750	F	31.1	36.7	153.5	125499	8/4 - 18/4	1.12 ± .02	.510
	6SHDK75N6	132237	7.5	208	3	60	1150	J	24.9	29.6	137.6	125498	12/4 - 18/4	.87 ± .02	.329
				230					24.0	27.6					
				460					12.0	13.8	68.8	125497		.87 ± .02	1.315
	6SHDK7556	132238	7.5	575	3	60	1150	J	9.6	11.0	55.0	125497	12/4 - 18/4	.87 ± .02	1.960
	6SHDK100N6	132239	10	208	3	60	1150	F	32.9	41.0	137.6	125498	8/4 - 18/4	1.12 ± .02	.329
				230					30.2	35.8					
				460					15.1	17.9	68.8	125497	12/4 - 18/4	.87 ± .02	1.315
	6SHDK10056	132240	10	575	3	60	1150	F	12.1	14.3	55.0	125497	12/4 - 18/4	.87 ± .02	1.960
	6SHDK150N6	132241	15	208	3	60	1150	H	47.0	56.8	248.6	125498	8/4 - 18/4	1.12 ± .02	.151
				230					44.1	51.4					
				460					22.0	25.7	124.3	125497	12/4 - 18/4	.87 ± .02	.603
	6SHDK15056	132242	15	575	3	60	1150	H	17.6	20.6	99.4	125497	12/4 - 18/4	.87 ± .02	.934
	6SHDK20046	132244	20	460	3	60	1150	E	28.6	34.9	248.6	125499	8/4 - 18/4	1.12 ± .02	.603
	6SHDK20056	132245	20	575	3	60	1150	E	22.9	27.9	99.4	125497	12/4 - 18/4	.87 ± .02	.934

Moisture and Temperature sensor leads are integral to power cord.

***** CORD ORDERED SEPARATELY *****

Winding Resistance ± 7.5% Winding resistance measured in OHMS @ 25°C (Between Lines) at motor leads.

Pump rated for operation at ± 10% voltage at motor.

Cord Suffix: XF - 50 Feet, XJ - 75 Feet, or XL - 100 Feet

THREE PHASE 460-575 VOLT AC (orange molded plug)	
Power Cable	**Motor Lead ID**
Green (Ground)	Green
Black	1
Red	2
White	3
Jumpered Inside Cord Automatically (No user jumpering required)	T4 & T7 Together
	T5 & T8 Together
	T6 & T9 Together

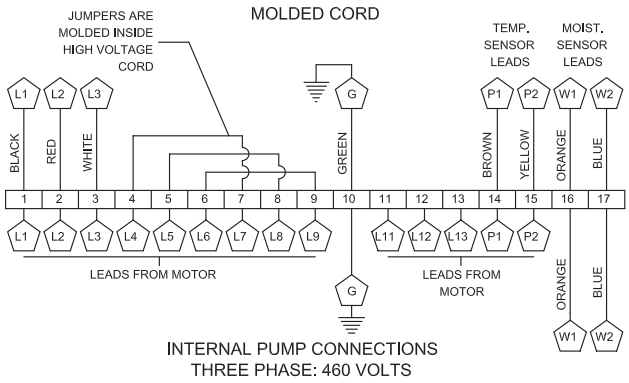

INTERNAL PUMP CONNECTIONS
THREE PHASE: 460 VOLTS

THREE PHASE 208-230 VOLT AC (black molded plug)	
Power Cable	**Motor Lead ID**
Green (Ground)	Green
Black	1
Red	2
White	3
Jumpered Inside Cord Automatically (No user jumpering required)	T4, T5 & T6 Together T11 & T7 Together T13 & T9 Together T12 & T8 Together

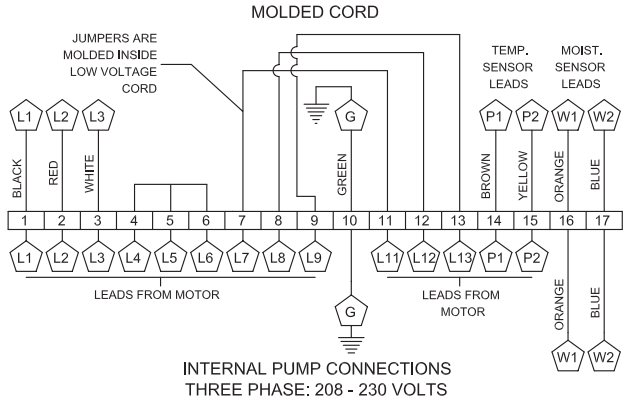

INTERNAL PUMP CONNECTIONS
THREE PHASE: 208 - 230 VOLTS

MOISTURE AND TEMPERATURE SENSORS	
Control Cable	**Lead ID**
Green (Ground)	Green
Brown	P1 (Temperature Sensor)
Yellow	P2 (Temperature Sensor)
Orange	W1 (Moisture Sensor)
Blue	W2 (Moisture Sensor)

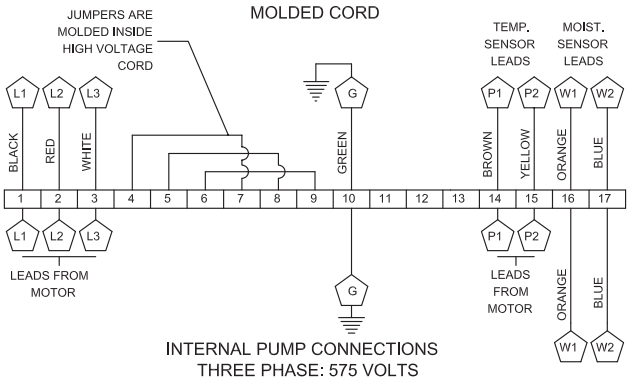

INTERNAL PUMP CONNECTIONS
THREE PHASE: 575 VOLTS

FIGURE 3

External Ground Note:

(Grd symbol) An external ground screw is provided on the side of the motor cap which can be used for supplemental bonding connection where local codes permit or require such connection.

TYPICAL THERMAL PROTECTION WIRING DIAGRAM

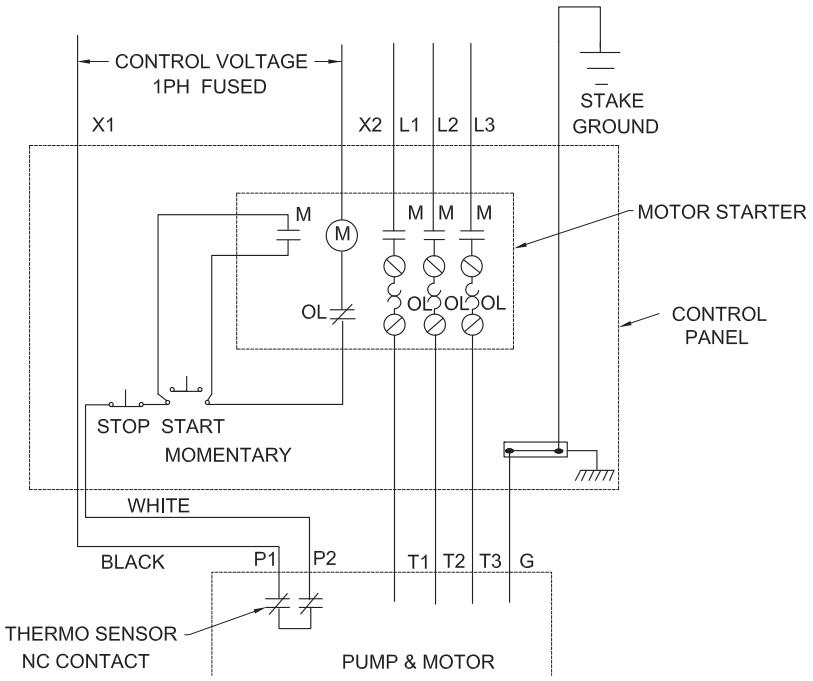

FIGURE 4

C-4.3) Overload Protection:
Current sensing overloads must be provided in the pump control panel and should be properly sized for the full load current of the pump. Three normally closed (N/C) thermal sensors wired in series (one per phase) are embedded in the motor windings and will detect excessive heat in the event an overload condition occurs which will then trip and stop the pump when wired in series with the pump contactor control circuit. The thermal sensor leads marked P1 and P2 MUST be connected in series with the stop button of the pilot circuit of the magnetic motor controller located in the control panel so that the thermostat will open the circuit before dangerous temperatures are reached. A manual momentary start switch is required to prevent the automatic restarting of the motor when the thermostat resets. For a typical wiring diagram, refer to Figure 4.

In the event of an over temperature condition, the source of this condition should be determined and rectified before the pump is put back into normal operation. **DO NOT LET THE PUMP CYCLE OR RUN IF AN OVER TEMPERATURE CONDITION OCCURS!**

If current through the temperature sensor exceeds the values listed, an intermediate control circuit relay must be used to reduce the current or the sensor will not work properly.

TEMPERATURE SENSOR ELECTRICAL RATINGS		
Volts	**Continuous Amperes**	**Inrush Amperes**
110-120	3.00	30.0
220-240	1.50	15.0
440-480	0.75	7.5

C-4.4) Moisture Sensors:
A normally open (N/O) detector is installed in the pump seal chamber, which will detect any moisture present, and a continuity test resistor built into the motor. The test resistor is rated 1 watt at 330K ohms. The moisture sensors **MUST** be connected to moisture detector control in the control panel which includes a continuity test circuit, see Figure 4 for typical wiring diagram. The normally closed (N/C) contact of the moisture detector **MUST** be connected in series with the stop button of the pilot circuit of the magnetic motor controller. Wiring must be provided from the moisture detector sensor probe leads of the motor designated W1 and W2 to terminals 9 and 10 of the 2800-XXX control. Terminal pair 1-2 must be continuously energized from an A-C supply line of electrical characteristics shown on the data table. In the event of moisture detection, the pump should be pulled and the source of the failure located and repaired. **IF MOISTURE DETECTION HAS OCCURRED, SCHEDULE MAINTENANCE AS SOON AS POSSIBLE !**

C-4.5) Control Panel and Electrical System:
The control panel and the electrical system **MUST** be properly designed and wired to include at least, but not limited to the following;

a. Proper grounding per NEC.
b. A temperature sensing circuit (See Fig. 4)
c. A moisture detection circuit with continuity test circuit (See Fig. 5)
d. A level control system.
e. A main power manual disconnect and lock out.
f. A motor starter and overload system.

TYPICAL WIRING DIAGRAM FOR MOISTURE SENSOR RELAY

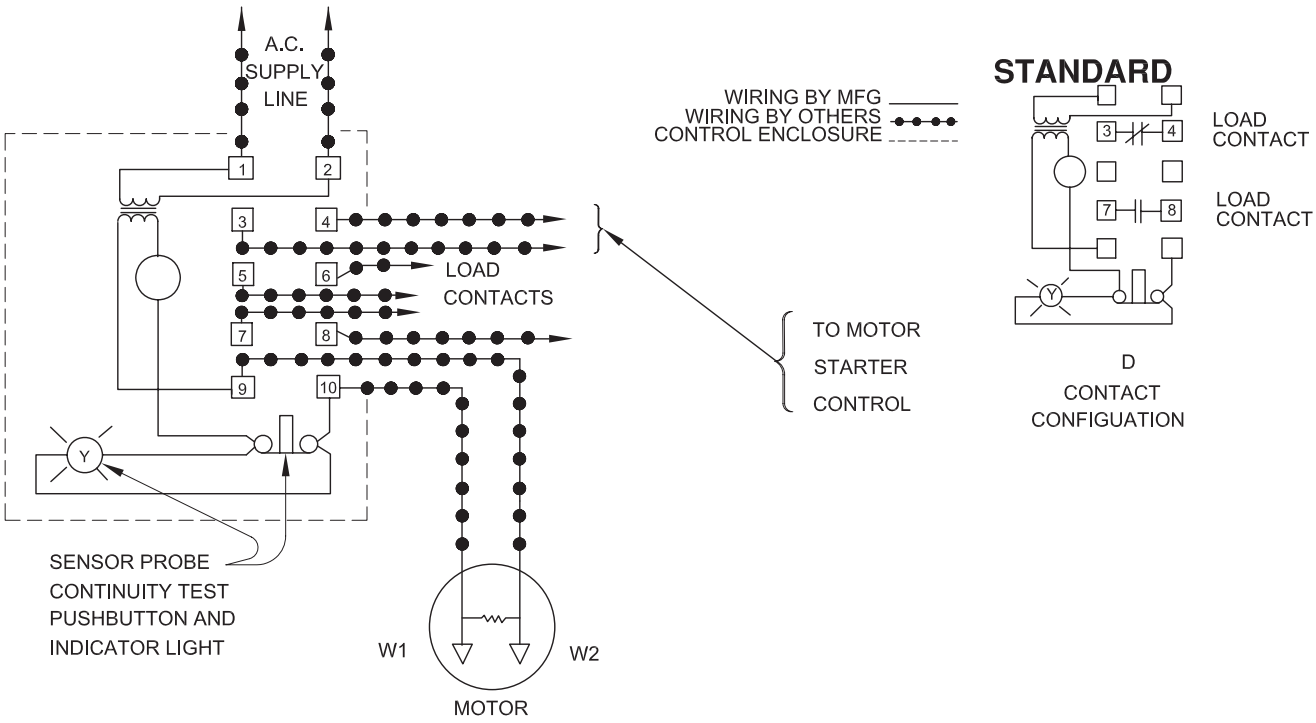

FIGURE 5

It is advisable that all three phase control panels be purchased from the factory.

SECTION: D START-UP OPERATION

D-1) Check Voltage and Phase:
Before operating pump, compare the voltage and phase information stamped on the pump's identification plate to the available power.

D-2) Check Pump Rotation:
Before putting pump into service for the first time, the motor rotation must be checked. Improper motor rotation can result in poor pump performance and can damage the motor and/or pump. To check the rotation, suspend the pump freely, momentarily apply power and observe the "kickback". "Kickback" should always be in a counter-clockwise direction as viewed from the top of the pump motor housing and will always be in the opposite direction of the rotation arrows cast in the pump volute.

D-2.1) Incorrect Rotation for Three-Phase Pumps:
In the event that the rotation is incorrect for a three-phase installation, interchange any two power cable leads at the control box. Recheck the "kickback" rotation again by momentarily applying power.

D-2.2) Test Procedure For Moisture Sensor Control:
With a moisture detection control, a normally closed push button and neon indicating lamp is typically provided as a means of checking the moisture sensing components. When the push button is depressed, the indicating lamp will be illuminated to indicate (A) power is supplied to the control, (B) the control is operative, and (C) wiring to the moisture sensing probes in the motor is intact. This procedure should be performed periodically to confirm integrity of the circuit.

D-3) Start-Up Report:
Included at the end of this manual is one start-up report sheet, this sheet is to be completed as applicable. Return a copy to Barnes and store the second in the control panel or with the pump manual. It is important to record this data at initial start-up since it will be useful to refer to should servicing the pump be required in the future.

D-3.1) Identification Plate:
Record the numbers from the pump's identification plate on the START-UP REPORT provided at the end of the manual for future reference.

D-3.2) Insulation Test:
Before the pump is put into service, an insulation (megger) test should be performed on the motor. The resistance values (ohms) as well as the voltage (volts) and current (amps) should be recorded on the start-up report. Pumps/systems with an insulation value of less than 5 M-Ohms should be investigated for moisture or damaged cables before proceeding.

D-3.3) Pump-Down Test:
After the pump has been properly wired and lowered into the basin, sump or lift station, it is advisable to check the system by filling with liquid and allowing the pump to operate through it's pumping cycle. The time needed to empty the system, or pump-down time along with the volume of water, should be recorded on the start-up report.

SECTION E: PREVENTATIVE MAINTENANCE

As the motor and seal chamber are oil-filled, no lubrication or other maintenance is required, and generally Barnes Pumps will give very reliable service and can be expected to operate for years of normal sewage pumping without failing. However, as with any mechanical piece of equipment a preventive maintenance program is recommended and suggested to include the following checks:

1) Test moisture detector control "Test Switch" for continuity of circuit. Water in the seal chamber will energize a seal leak warning light at the control panel. This is a warning light only and does not stop the motor. It indicates the seal has leaked and must be repaired. This should be done within 2 or 3 weeks to prevent further damage. See section D-2.2.
2) Inspect impeller and body for excessive build-up or clogging and repair as required per section F-2.
3) Inspect outer shaft seal and replace as required per section F-3.
4) Check motor for ground leakage and proper amp draw.

SECTION F: SERVICE AND REPAIR

NOTE: All item numbers in ( ) refer to Figures 9 & 10.

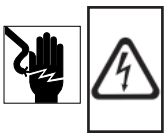

WARNING ! - Electrical power to the pump motors must be disconnected and locked out to prevent any dangerous electrical hazards or personnel danger before any service work is done to the pump.

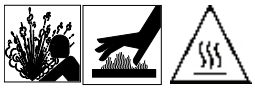

CAUTION ! - Operating pump builds up heat and pressure; allow time for pump to cool to room temperature before handling or servicing.

F-1) Lubrication
F-1.1) Checking Oil
1. Place pump on it's side, and drain oil into a clean, dry container.
2. Check oil for contamination using an oil tester with a range to 30Kilovolts breakdown.
3. If oil is found to be clean and uncontaminated (measure above 15 KV. breakdown), refill the seal chamber as per section F-1.2.
4. If oil is found to be dirty or contaminated (or measures below 15 KV. breakdown), the pump must be carefully inspected for leaks at the shaft seal (4), before refilling with oil. To locate the leak, perform a pressure test as per section F-1.3. After leak is repaired, refill with new oil as per section F-1.2.

F-1.2) Replacing Oil:
Seal Chamber - Drain all oil from seal chamber and dispose of properly. Refill with (see parts list for amount) new cooling oil as per Table 1. An air space must remain to compensate for oil expansion (See Fig. 9). Set unit on side and fill.

IMPORTANT! - Do not overfill oil. Overfilling of seal chamber with oil can create excessive and dangerous hydraulic pressure which can destroy the pump and create a hazard. Overfilling oil voids warranty.

F-1.3) Pressure Test:
Seal Chamber - Before checking the pump for leaks around the shaft seal, the oil level should be full. Remove pipe plug. Apply pipe sealant to pressure gauge assembly and tighten into pipe plug hole. Pressurize motor housing to 10 P.S.I. Use a soap solution around the sealed area and inspect joints for "air bubbles". If, after five minutes, the pressure is still holding constant, and no "bubbles" are observed, slowly bleed the pressure and remove the gauge assembly. Replace the pipe plug using a sealant. If the pressure does not hold, then the leak must be located.

CAUTION! - Pressure builds up extremely fast, increase pressure by "tapping" air nozzle. Too much pressure will damage seal. Do Not exceed 10 P.S.I. in seal chamber.

TABLE 1 - COOLING OIL - Dielectric	
SUPPLIER	**GRADE**
BP	Enerpar SE100
Conoco	Pale Paraffin 22
Mobil	D.T.E. Oil Light
G & G Oil	Circulating 22
Imperial Oil	Voltesso-35
Shell Canada	Transformer-10
Texaco	Diala-Oil-AX
Woco	Premium 100

F-2) Impeller and Volute Service:
F-2.1) Disassembly and Inspection:
To clean out the volute (10), or clean out or replace impeller (6), disconnect power, remove cap screws (8) then vertically lift motor assembly from the pump body (10). Clean out the volute, if necessary, clean and examine impeller (6) for pitting or wear, replace if required. To remove Impeller (6), remove cap screw (8). The impeller is keyed onto the shaft with a square key (7) and to remove, pull impeller straight off the shaft using a wheel puller if required. Inspect o-ring (9) and replace if cut or damaged. Before reinstallation, check the motor shaft and impeller bore for damage.

F-2.2) Reassembly:
To install impeller (6), apply a thin film of oil to motor shaft and slide impeller straight onto shaft, keeping keyways lined up. Drive key (7) into keyway. Thread cap screw (8) into shaft and torque to 35 ft. lbs. Rotate impeller to check for binding. Place o-ring (9) on seal plate pilot diameter lining up holes and install impeller and motor assembly onto volute (10). Loctite cap screws (2), insert into volute and motor assembly and torque to 35 ft. lbs. Check for free rotation of motor and impeller.

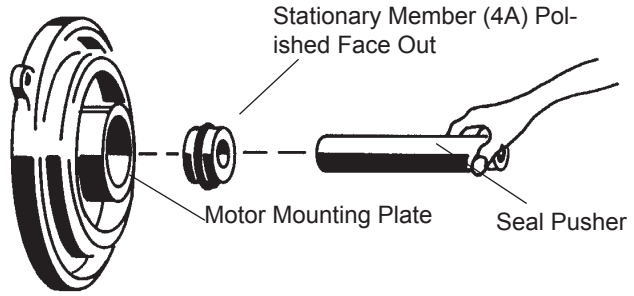

FIGURE 7

F-3) Outer Shaft Seal Service:

CAUTION ! - Handle seal parts with extreme care. DO NOT scratch or mar lapped surfaces.

F-3.1) Disassembly and Inspection:
To expose outer shaft seal (4) for examination, remove Impeller and Volute per Section F-1.1. Set motor assembly (1) in the inverted position to prevent loss of oil. Remove snap ring from motor shaft, then retaining ring (5), spring (4C) and rotating member (4B) from shaft, See Figure 5 Examine all seal parts and especially contact faces. Inspect seal for signs of wear such as uneven wear pattern on stationary members, chips and scratches on either seal face. **DO NOT** interchange seal components, replace the entire shaft seal (4). If replacing seal, remove stationary (4A) from mounting plate by prying out with flat screw driver.

F-3.2) Reassembly:
Lightly oil **(DO NOT use grease)** outer surface of stationary member (4A). Press stationary member (4A) firmly into mounting plate using a seal pusher aligning seal with pin, nothing but the seal pusher is to come in contact with seal face (See Fig. 7).

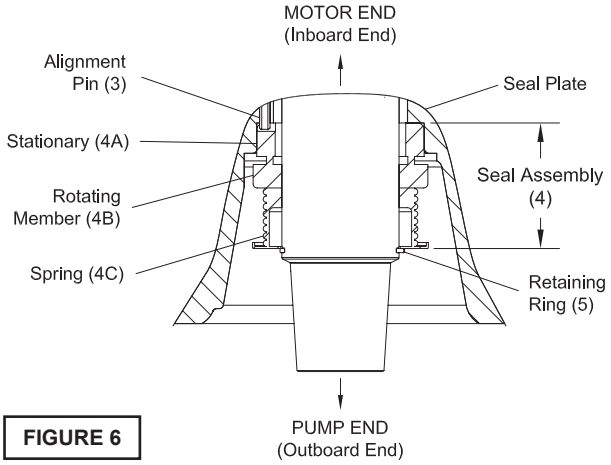

FIGURE 6

Make sure the stationary member is in straight and that the rubber ring is not out of it's groove. Lightly oil **(DO NOT use grease)** shaft and inner surface of bellows on rotating member (4B) see Figure 8. With lapped surface of rotating member (4B) facing inward toward stationary member (4A), slide rotating member (4B) onto shaft using a seal pusher, until lapped faces of (4A) and (4B) are together. (See Fig. 8).

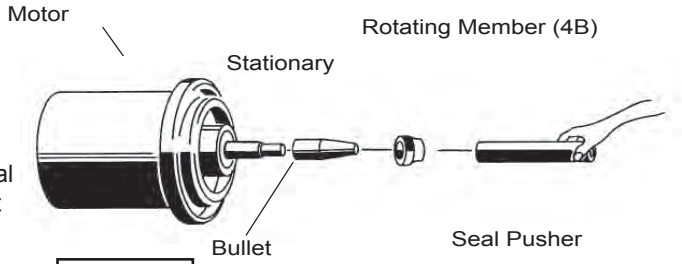

FIGURE 8

IMPORTANT ! - It is extremely important to keep seal faces clean during assembly. dirt particles lodged between these faces will cause the seal to leak.

Place spring (4C) over shaft and in place on rotating member (4B), making sure it is seated on retainer and not cocked or resting on bellows tail. Slide retaining ring (5) over shaft and let rest on spring (4C). Replace snap ring onto motor shaft. Inspect gasket (9) and replace if cut or damaged. Assemble impeller and volute as outlined in paragraph F-1.2.

SECTION: G REPLACEMENT PARTS

G-1 ORDERING REPLACEMENT PARTS:

When ordering replacement parts, ALWAYS furnish the following information:

1. Pump serial number and date code. (Paragraph G-4)
2. Pump model number. (Paragraph G-3)
3. Pump part number. (Paragraph G-2)
4. Part description.
5. Item part number.
6. Quantity required.
7. Shipping instructions.
8. Billing Instructions.

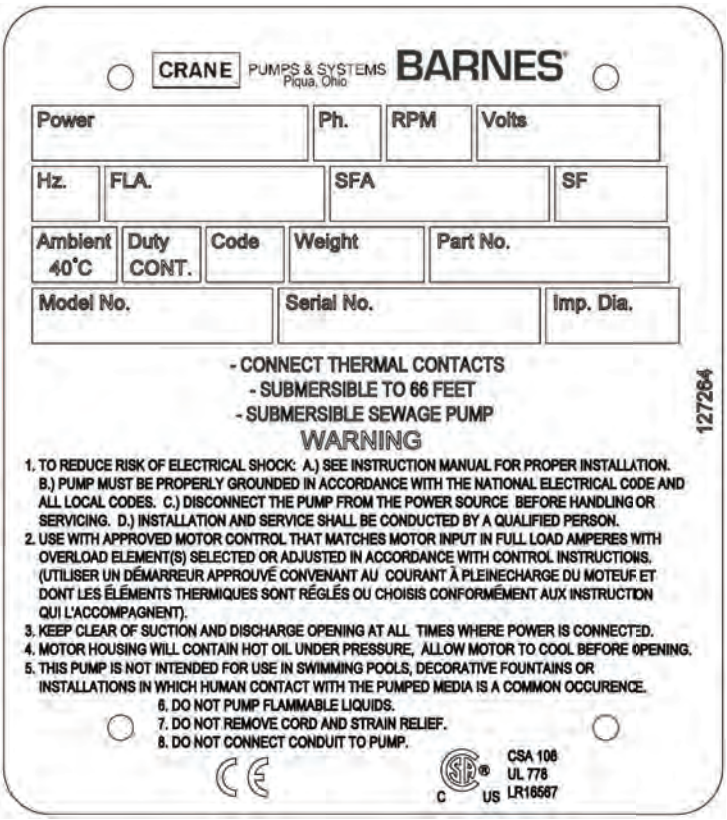
CRANE PUMPS & SYSTEMS Piqua, Ohio BARNES

Power	Ph.	RPM	Volts

Hz.	FLA.	SFA	SF

Ambient 40°C	Duty CONT.	Code	Weight	Part No.

Model No.	Serial No.	Imp. Dia.

- CONNECT THERMAL CONTACTS
- SUBMERSIBLE TO 66 FEET
- SUBMERSIBLE SEWAGE PUMP

127264

WARNING

1. TO REDUCE RISK OF ELECTRICAL SHOCK: A.) SEE INSTRUCTION MANUAL FOR PROPER INSTALLATION. B.) PUMP MUST BE PROPERLY GROUNDED IN ACCORDANCE WITH THE NATIONAL ELECTRICAL CODE AND ALL LOCAL CODES. C.) DISCONNECT THE PUMP FROM THE POWER SOURCE BEFORE HANDLING OR SERVICING. D.) INSTALLATION AND SERVICE SHALL BE CONDUCTED BY A QUALIFIED PERSON.
2. USE WITH APPROVED MOTOR CONTROL THAT MATCHES MOTOR INPUT IN FULL LOAD AMPERES WITH OVERLOAD ELEMENT(S) SELECTED OR ADJUSTED IN ACCORDANCE WITH CONTROL INSTRUCTIONS. (UTILISER UN DÉMARREUR APPROUVÉ CONVENANT AU COURANT À PLEINECHARGE DU MOTEUF ET DONT LES ÉLÉMENTS THERMIQUES SONT RÉGLÉS OU CHOISIS CONFORMÉMENT AUX INSTRUCTION QUI L'ACCOMPAGNENT).
3. KEEP CLEAR OF SUCTION AND DISCHARGE OPENING AT ALL TIMES WHERE POWER IS CONNECTED.
4. MOTOR HOUSING WILL CONTAIN HOT OIL UNDER PRESSURE, ALLOW MOTOR TO COOL BEFORE OPENING.
5. THIS PUMP IS NOT INTENDED FOR USE IN SWIMMING POOLS, DECORATIVE FOUNTAINS OR INSTALLATIONS IN WHICH HUMAN CONTACT WITH THE PUMPED MEDIA IS A COMMON OCCURENCE.
6. DO NOT PUMP FLAMMABLE LIQUIDS.
7. DO NOT REMOVE CORD AND STRAIN RELIEF.
8. DO NOT CONNECT CONDUIT TO PUMP.

CSA 108
UL 778
C US LR16567

G-2 PART NUMBER:

This number is used for ordering and obtaining information.

G-3 MODEL NUMBER:

This designation consists of numbers and letters which represent the discharge size, series, horsepower, motor phase and voltage, speed and pump design. This number is used for ordering and obtaining information.

G-4 SERIAL NUMBER:

The serial number block will consist of a six digit number, which is specific to each pump and may be preceded by an alpha character, which indicates the plant location. This number will also be suffixed with a four digit number, which indicates the date the unit was built (Date Code).
EXAMPLE: A012345 0490.

Reference the six digit portion (Serial Number) of this number when referring to the product.

TROUBLE SHOOTING

CAUTION ! Always disconnect the pump from the electrical power source before handling.
If the system fails to operate properly, carefully read instructions and perform maintenance recommendations.
If operating problems persist, the following chart may be of assistance in identifying and correcting them:
MATCH "CAUSE" NUMBER WITH CORRELATING "CORRECTION" NUMBER.

NOTE: Not all problems and corrections will apply to each pump model.

PROBLEM	CAUSE	CORRECTION
Pump will not run	**1.** Poor electrical connection, blown fuse, tripped breaker or other interruption of power, improper power supply. **2.** Motor or switch inoperative (to isolate cause, go to manual operation of pump). **2a.** Float movement restricted. **2b.** Switch will not activate pump or is defective. **2c.** Defective motor **3.** Insufficient liquid level.	1. Check all electrical connections for security. Have electrician measure current in motor leads, if current is within ±20% of locked rotor Amps, impeller is probably locked. If current is 0, overload may be tripped. Remove power, allow pump to cool, then recheck current. 2a. Reposition pump or clean basin as required to provide adequate clearance for float. 2b. Disconnect level control. Set ohmmeter for a low range, such as 100 ohms full scale and connect to level control leads. Actuate level control manually and check to see that ohmmeter shows zero ohms for closed switch and full scale for open switch. (Float Switch). 2c. Check winding insulation (Megger Test) and winding resistance. If check is outside of range, dry and recheck. If still defective, replace per service instructions. 3. Make sure liquid level is at least equal to suggested turn-on point. 4. Recheck all sizing calculations to determine proper pump size. 5. Check discharge line for restrictions, including ice if line passes through or into cold areas. 6. Remove and examine check valve for proper installation and freedom of operation. 7. Open valve. 8. Check impeller for freedom of operation, security and condition. Clean impeller and inlet of any obstruction. 9. Loosen union slightly to allow trapped air to escape.Verify that turn-off level of switch is set so that the suction is always flooded. Clean vent hole. 10. Check rotation. If power supply is three phase, reverse any two of three power supply leads to ensure proper impeller rotation.. 11. Repair fixtures as required to eliminate leakage. 12. Check pump temperature limits & fluid temperature. 13. Replace portion of discharge pipe with flexible connector. 14. Turn to automatic position. 15. Check for leaks around basin inlet and outlets.
Pump will not turn off	2a. Float movement restricted. 2b. Switch will not activate pump or is defective. 4. Excessive inflow or pump not properly sized for application. 9. Pump may be airlocked 14. H-O-A switch on panel is in "HAND" position	
Pump hums but does not run	1. Incorrect voltage 8. Impeller jammed or loose on shaft, worn or damaged, impeller cavity or inlet plugged.	
Pump delivers insufficient capacity	1. Incorrect voltage. 4. Excessive inflow or pump not properly sized for application. 5. Discharge restricted. 6. Check valve stuck closed or installed backwards. 7. Shut-off valve closed. 8. Impeller jammed or loose on shaft, worn or damaged, impeller cavity or inlet plugged. 9. Pump may be airlocked. 10. Pump running backwards	
Pump cycles too frequently or runs periodically when fixtures are not in use	6. Check valve stuck closed or installed backwards. 11. Fixtures are leaking. 15. Ground water entering basin.	
Pump shuts off and turns on independent of switch, (trips thermal overload protector). **CAUTION!** Pump may start unexpectedly. Disconnect power supply.	1. Incorrect voltage. 4. Excessive inflow or pump not properly sized for application. 8. Impeller jammed, loose on shaft, worn or damaged, impeller cavity or inlet plugged. 12. Excessive water temperature. (internal protection only)	
Pump operates noisily or vibrates excessively	2c. Worn bearings, motor shaft bent. 5. Debris in impeller cavity or broken impeller 10. Pump running backwards 13. Piping attachments to buiding structure too rigid or too loose.	

SH Pump Series - Cross Sections

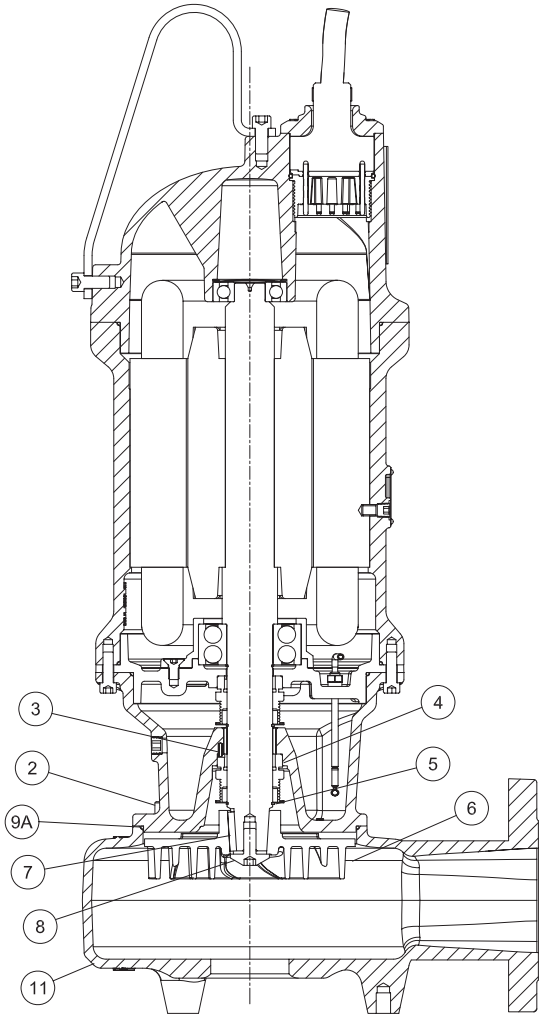

SH Vortex

FIGURE 9

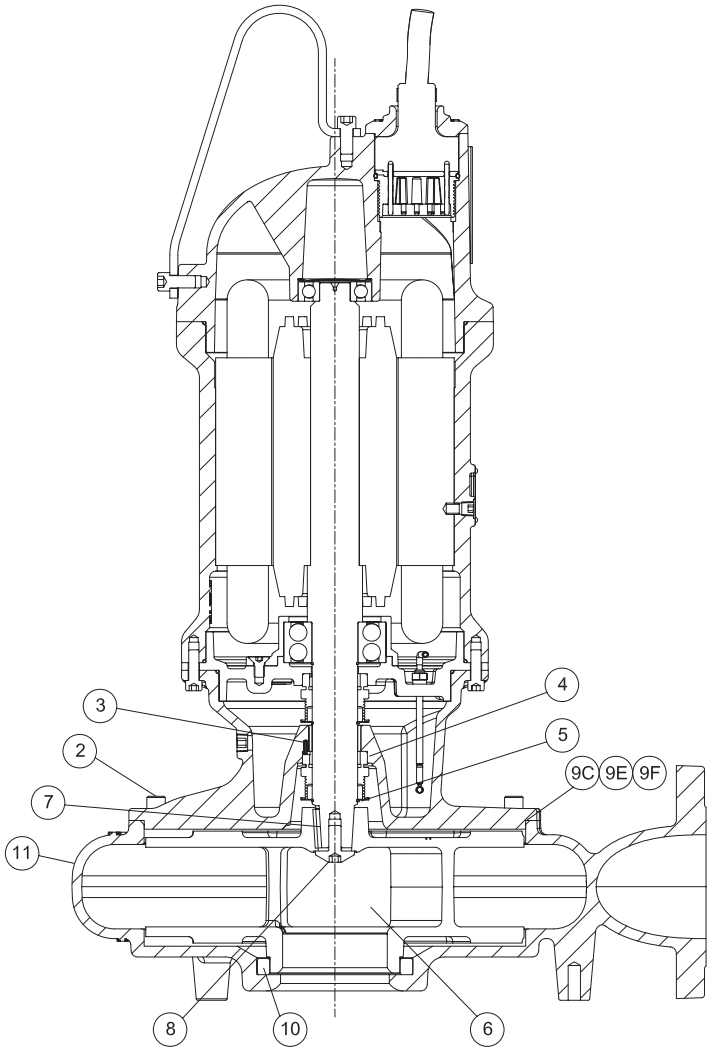

SH Enclosed

FIGURE 10

SH Pump Series - Exploded Views

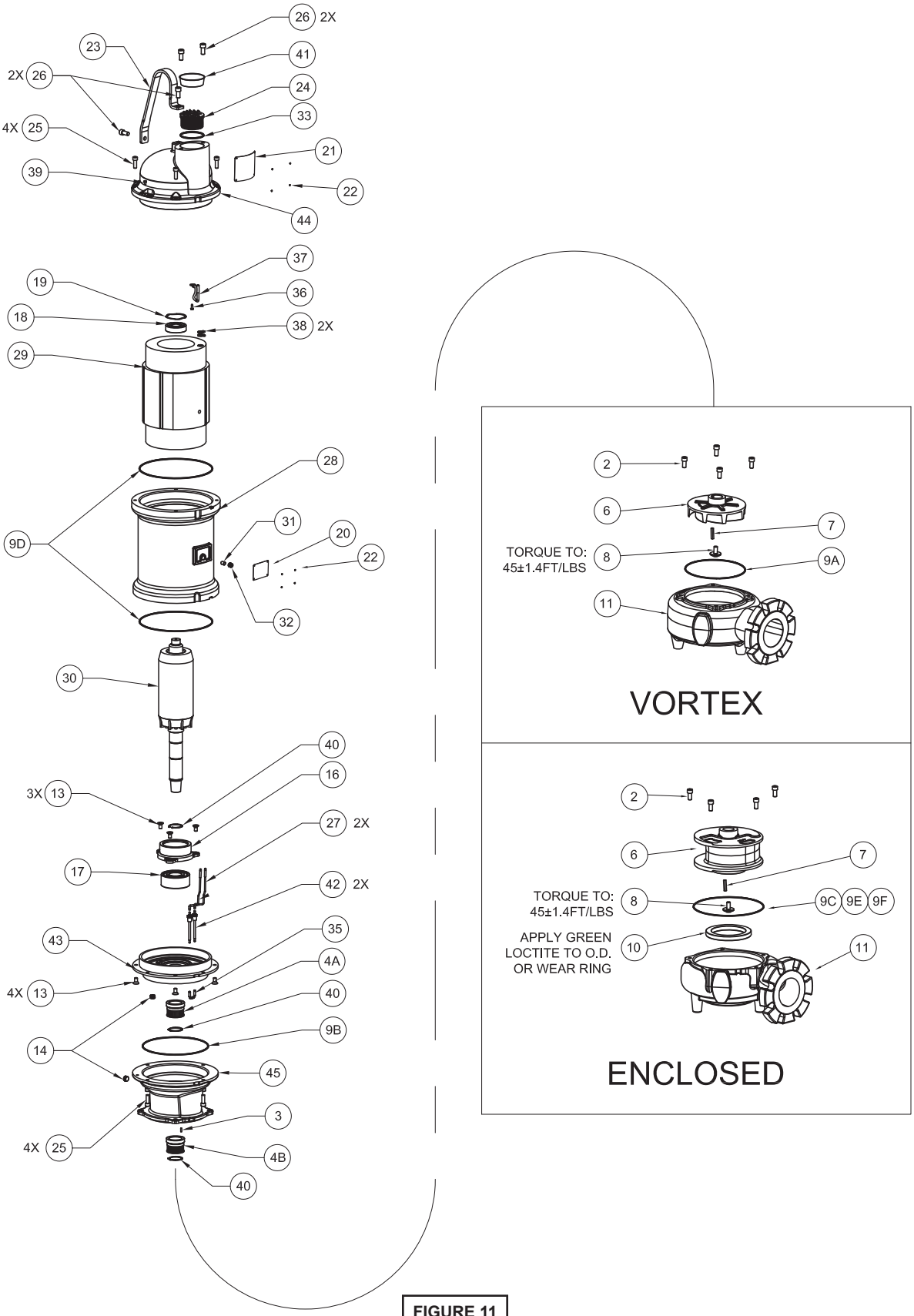

FIGURE 11

SH 21 Frame - PARTS LIST

Seal & Gasket Kit..... p/n 132120A (+) 2, 3, 4, 5, 7, 8, 9, 13
Bearing Kit ..... p/n 132118A (●) 5, 9, 13, 14, 15, 16, 17, 18, 19
Overhaul Kit ..... p/n 132119 (◊) 2, 7, 8, 9
Leg Kit ..... p/n 125506

ITEM	QTY	PART NO.		DESCRIPTION	
1	1	See Table		Driver Assembly	
2		127223	+ ◊	Screw, SHCS, M12 x 1.75 x 25	18-8 SS
3	1	127248	+	Pin, Spring, .125 Dia. x .50” LG.	420 SS
4A	1	125852	+	Seal, Mechanical Type 21, 1.75”, C/CE/B	
4B	1	125852SD	+	Seal, Mechanical Type 21, 1.75”, SC/SC/B	
5	3	129381	+●	Ring, Retaining, EXT, 5100-177-H-SS	420 SS
6	1	See Table		Impeller	Ductile Iron
7	1	Q21-20-J8	+ ◊	Key, ¼ x ¼ x 1½”	303 SS
8	1	125858	+ ◊	Bolt, THSCS, 12mm x 1.75 x 25	18-8 SS
9A	1	125857-200	+	O-Ring, M3 x 200, 70 Duro	Buna-N
9B	1	125857-220	+●	O-Ring, M3 x 220, 70 Duro	Buna-N
9C	1	125857-235	+ ◊	O-Ring, M3 x 235, 70 Duro	Buna-N
9D	2	125857-245	+●	O-Ring, M3 x 245, 70 Duro	Buna-N
9E	1	125857-295	+ ◊	O-Ring, M3 x 295, 70 Duro	Buna-N
9F	1	125857-360	+ ◊	O-Ring, M3 x 360, 70 Duro	Buna-N
10		129996		Wear Ring	Bronze
		129998		Wear Ring	Bronze
		129997		Wear Ring	Bronze
		130833		Wear Ring	Bronze
		130834		Wear Ring	Bronze
11		125453		Volute, Vortex	Cast Iron
		129994		Volute, Enclosed	Cast Iron
		129995		Volute, Enclosed	Cast Iron
		127254		Volute, Enclosed	Cast Iron
		130830		Volute, Enclosed	Cast Iron
		130831		Volute, Enclosed	Cast Iron
12		029034		Seal Chamber Oil Fill	Oil
13	7	125850	+●	Screw, SKT, FCHS, M10 x 1.5 x 20	
14	2	014270-SS	●	Plug, Pipe, 0.375-18NPT,	SS
16	1	125457	●	Retainer, Bearing, 3309	Ductile Iron
17	1	127273	●	Bearing, Ball, 3309-A	
18	1	127274	●	Bearing, Ball, 6306	
19	1	127271	●	Washer, Springer, Wavy, 72mm	Steel
20	1	127266		Plate, Model	300 Stainless Steel
21	1	127264		Nameplate, Main	300 Stainless Steel
22	8	001628		Rivet, Nameplate	Stainless Steel
23	1	125458		Handle, Lifting, 210FR, SS	304 Stainless Steel
24	1	125459		Block, Term, 17 pin, 180, Quick	Valox/BR
25	16	131147	+●	Screw, SHCS, M10 x 1.5 x 35	18-8 Stainless Steel
26	9	127223		Screw, SHCS, M12 x 1.75 x 25, SS	18-8 Stainless Steel
27	2	127234		Wire, Jumper, Blue, 24”, Bar/Bar	
28	1	126632A		Housing, Motor, Lower, 210FR	Class 30 CI
29	1	126588		Stator, 2P, 210 Frame	
30	1	126589		Assy, Rotor/Shaft, 210FR	
31	1	127272		Pin, Spring, Steel, 0.25” D, 0.625” L	AISI 1020
32	1	127269		Plug, Pipe, ¼-18 NPT, SS	300 Series SS
33	1	2-31003-234		O-Ring, 2-234, Buna-N, 70 Duro	Buna-N
35	1	127267		Resistor, Moisture, Sensor	
36	1	127247		Screw, HWHTS, 1032 x 0.50, TC, GCZP	GC-ZP-STL
37	1	127249		Wire, Jumper, Green, 6”, Bar/O-Ring, 8G	
38	2	039462		Tie, Cable	
39	1	125855		Screw, SHCS, M5 x 0.8 x 8	Stainless Steel

SH 21 Frame - PARTS LIST

ITEM	QTY	PART NO.	DESCRIPTION	
41	1	127270	Plug, Cap, 3.37”, Tappered	PE
42	2	125856	Sensor, Moisture, ¼-18NPT, AMP	PP / SS
43	1	125450A	Bracket, Bearing, 21 Frame	Class 30 CI
44	1	130685	Housing, Motor, 21 Frame	Class 30 CI
45	1	See Chart	Plate, Seal, 21 Frame, 207mm	Class 30 CI
46	5	125502	Paint, Epoxy, Part “A”, Blue	
47	5	125503	Paint, Epoxy, Part “B”, VF-525	

SH Pump Series Power Cable Chart

Part No.	Length (feet)	Volt	Max. Amps	Cord Size	Cord O.D. +/- .02in (.5mm)
125497XF	50	400-600	31.7	12/4 - 18/4	0.86in (22.0mm)
125497XJ	75	400-600	31.7	12/4 - 18/4	0.86in (22.0mm)
125497XL	100	400-600	31.7	12/4 - 18/4	0.86in (22.0mm)
125498XF	50	208-240	59.0	8/4 - 18/4	1.12in (28.4mm)
125498XJ	75	208-240	59.0	8/4 - 18/4	1.12in (28.4mm)
125498XL	100	208-240	59.0	8/4 - 18/4	1.12in (28.4mm)
125499XF	50	400-600	59.0	8/4 - 18/4	1.12in (28.4mm)
125499XJ	75	400-600	59.0	8/4 - 18/4	1.12in (28.4mm)
125499XL	100	400-600	59.0	8/4 - 18/4	1.12in (28.4mm)

Note: 1 - Standard Motor includes, Moisture & Temperature Sensors and Carbon/Ceramic/Buna-N Inner & Silicon Carbide/Silicon Carbide/ Buna-N Outer Shift Seals.

Note: 2 - Item 4 is for Outer seal replacement **ONLY.**

3450 RPM Driver Assembly		
Part No.	Model	Volute Size
130478	— SH — — 75N2	208mm
130479	— SH — — 7552	
130480	— SH — — 100N2	
130481	— SH — — 10052	
130482	— SH — — 150N2	
130483	— SH — — 15052	
130484	— SH — — 20082	
130485	— SH — — 20052	
130486	— SH — — 25042	
130487	— SH — — 25052	
130488	— SH — — 30042	
130489	— SH — — 30052	

1150 RPM Driver Assembly		
Part No.	Model	Volute Size
132888	— SH — — 75N6	370mm
132889	— SH — — 7556	
132890	— SH — — 100N6	
132891	— SH — — 10056	
132886	— SH — — 150N4	
132887	— SH — — 15054	
132892	— SH — — 150N6	
132893	— SH — — 15056	
132894	— SH — — 20046	
132895	— SH — — 20056	

1750 RPM Driver Assembly		
Part No.	Model	Volute Size
130732	— SH — — 75N4	240mm
130733	— SH — — 7554	
130734	— SH — — 100N4	
130735	— SH — — 10054	
130736	— SH — — 150N4	
130737	— SH — — 15054	
132884	— SH — — 20084	
132885	— SH — — 20054	
130769	— SH — — 150N4	305mm
130770	— SH — — 15054	
130742	— SH — — 20084	
130743	— SH — — 20054	
130744	— SH — — 25044	
130745	— SH — — 25054	
130746	— SH — — 30044	
130747	— SH — — 30054	
132886	— SH — — 150N4	370mm
132887	— SH — — 15054	
131024	— SH — — 20084	
131025	— SH — — 20054	
131026	— SH — — 25044	
131027	— SH — — 25054	
131028	— SH — — 30044	
131029	— SH — — 30054	

Volute Pilot Diameter		
Model	Volute Size	Seal Plate P/N
4SHVA	208mm	130686
4SHVB	208mm	130686
4SHMC	240mm	130687
4SHMD	305mm	130688
4SHDG	240mm	130687
4SHDI	370mm	130689
6SHVL	370mm	130689
6SHMN	370mm	130689
6SHMH	370mm	130689
6SHDK	370mm	130689

Seals	
Part No.	Material
125852	Carbon / Ceramic
125852SB	Tungsten Carbide / Tungsten Carbide
125852SD +	Silicon Carbide / Silicon Carbide

"A" Hydraulics Impeller	
Part No.	**Trim Dia. mm (in)**
125454B	205mm (8.07in)
125454BTA	200mm (7.87in)
125454	205mm (8.07in)
125454TA	200mm (7.87in)
125454TB	195mm (7.68in)
125454TC	190mm (7.48in)
125454TD	185mm (7.28in)
125454TE	180mm (7.09in)
125454TF	175mm (6.89in)
125454TG	170mm (6.69in)
125454TH	165mm (6.50in)
125454TJ	160mm (6.30in)
125454TK	155mm (6.10in)
125454TL	150mm (5.91in)
125454TM	145mm (5.71in)
125454TN	140mm (5.51in)
125454TP	135mm (5.31in)
125454TR	130mm (5.12in)
125454TS	125mm (4.92in)

"B" Hydraulics Impeller	
Part No.	**Trim Dia. mm (in)**
125456	185mm (7.28in)
125456TA	180mm (7.09in)
125456TB	175mm (6.89in)
125456TC	170mm (6.69in)
125456TD	165mm (6.50in)
125456TE	160mm (6.30in)
125456TF	155mm (6.10in)
125456TG	150mm (5.91in)
125456TH	145mm (5.71in)
125456TJ	140mm (5.51in)
125456TK	135mm (5.31in)
125456TL	130mm (5.12in)
125456TM	125mm (4.92in)
125456TN	120mm (4.72in)
125456TP	115mm (4.53in)
125456TR	110mm (4.33in)
125456TS	105mm (4.13in)
125456TT	100mm (3.94in)
125456TU	95mm (3.74in)

"C" Impeller	
Part No.	**Trim Dia. mm (in)**
127263	235mm (9.25in)
127263TA	230mm (9.06in)
127263TB	225mm (8.86in)
127263TC	220mm (8.66in)
127263TD	215mm (8.46in)
127263TE	210mm (8.27in)
127263TF	205mm (8.07in)
127263TG	200mm (7.87in)
127263TH	195mm (7.68in)
127263TJ	190mm (7.48in)
127263TK	185mm (7.28in)

"D" Impeller	
Part No.	**Trim Dia. mm (in)**
127262	295mm (11.61in)
127262TA	290mm (11.42in)
127262TB	285mm (11.22in)
127262TC	280mm (11.02in)
127262TD	275mm (10.83in)
127262TE	270mm (10.63in)
127262TF	265mm (10.43in)
127262TG	260mm (10.23in)
127262TH	255mm (10.04in)
127262TJ	250mm (9.84in)
127262TK	245mm (9.65in)
127262TL	240mm (9.45in)
127262TM	235mm (9.25in)
127262TN	230mm (9.06in)
127262TP	225mm (8.86in)

"G" Impeller	
Part No.	**Trim Dia. mm (in)**
129991	235mm (9.25in)
129991TA	230mm (9.06in)
129991TB	225mm (8.86in)
129991TC	220mm (8.66in)
129991TD	215mm (8.46in)
129991TE	210mm (8.27in)
129991TF	205mm (8.07in)
129991TG	200mm (7.87in)
129991TH	195mm (7.68in)
129991TJ	190mm (7.48in)
129991TK	185mm (7.28in)
129991TL	180mm (7.09in)
129991TM	175mm (6.89in)
129991TN	170mm (6.69in)
129991TP	165mm (6.50in)

"I" Impeller	
Part No.	**Trim Dia. mm (in)**
129993	370mm (14.57in)
129993TA	365mm (14.37in)
129993TB	360mm (14.17in)
129993TC	355mm (13.98in)
129993TD	350mm (13.78in)
129993TE	345mm (13.58in)
129993TF	340mm (13.45in)
129993TG	335mm (13.19in)
129993TH	330mm (12.99in)
129993TJ	325mm (12.80in)
129993TK	320mm (12.60in)
129993TL	315mm (12.40in)
129993TM	310mm (12.20in)
129993TN	305mm (12.01in)
129993TP	300mm (11.81in)
129993TR	295mm (11.61in)
129993TS	290mm (11.42in)
129993TT	285mm (11.22in)
129993TU	280mm (11.02in)
129993TV	275mm (10.83in)
129993TW	270mm (10.63in)
129993TX	265mm (10.43in)
129993TY	260mm (10.24in)
129993TZ	255mm (10.04in)
129993TAA	250mm (9.84in)
129993TAB	245mm (9.65in)
129993TAC	240mm (9.45in)
129993TAD	235mm (9.25in)
129993TAE	230mm (9.06in)

"H" Hydraulics Impeller	
Part No.	**Trim Dia. mm (in)**
130826A	315mm (12.40in)
130826ATA	310mm (12.20in)
130826ATB	305mm (12.01in)
130826ATC	300mm (11.81in)
130826ATD	295mm (11.61in)
130826ATE	290mm (11.42in)
130826ATF	285mm (11.22in)
130826ATG	280mm (11.02in)
130826ATH	275mm (10.83in)
130826ATJ	270mm (10.63in)
130826ATK	265mm (10.43in)
130826ATL	260mm (10.23in)
130826ATM	255mm (10.04in)

"J" Hydraulics Impeller	
Part No.	**Trim Dia. mm (in)**
130826	370mm (14.57in)
130826TA	365mm (14.37in)
130826TB	360mm (14.17in)
130826TC	355mm (13.98in)
130826TD	350mm (13.78in)
130826TE	345mm (13.58in)
130826TF	340mm (13.45in)
130826TG	335mm (13.19in)
130826TH	330mm (12.99in)
130826TJ	325mm (12.80in)
130826TK	320mm (12.60in)
130826TL	315mm (12.40in)
130826TM	310mm (12.20in)

"N" Impeller	
Part No.	**Trim Dia. mm (in)**
130826B	260mm (10.23in)
130826BTA	255mm (10.04in)
130826BTB	250mm (9.84in)
130826BTC	245mm (9.65in)
130826BTD	240mm (9.45in)
130826BTE	235mm (9.25in)
130826BTF	230mm (9.06in)
130826BTG	225mm (8.86in)
130826BTH	220mm (8.66in)
130826BTJ	215mm (8.46in)
130826BTK	210mm (8.27in)
130826BTL	205mm (8.07in)
130826BTM	200mm (7.87in)

"K" Impeller	
Part No.	**Trim Dia. mm (in)**
130827	370mm (14.57in)
130827TA	365mm (14.37in)
130827TB	360mm (14.17in)
130827TC	355mm (13.98in)
130827TD	350mm (13.78in)
130827TE	345mm (13.58in)
130827TF	340mm (13.45in)
130827TH	330mm (12.99in)
130827TJ	325mm (12.80in)
130827TK	320mm (12.60in)
130827TL	315mm (12.40in)
130827TM	310mm (12.20in)
130827TN	305mm (12.01in)
130827TP	300mm (11.81in)
130827TQ	295mm (11.61in)
130827TR	290mm (11.42in)
130827TS	285mm (11.22in)
130827TT	280mm (11.02in)
130827TU	275mm (10.83in)
130827TV	270mm (10.63in)
130827TW	265mm (10.43in)
130827TX	260mm (10.23in)
130827TY	255mm (10.04in)
130827TZ	250mm (9.84in)
130827UA	245mm (9.65in)
130827UB	240mm (9.45in)
130827UC	235mm (9.25in)

"L" Impeller	
Part No.	**Trim Dia. mm (in)**
130828	330mm (12.99in)
130828TA	325mm (12.80in)
130828TB	320mm (12.60in)
130828TC	315mm (12.40in)
130828TD	310mm (12.20in)
130828TE	305mm (12.01in)
130828TF	300mm (11.81in)
130828TG	295mm (11.61in)
130828TH	290mm (11.42in)
130828TJ	285mm (11.22in)
130828TK	280mm (11.02in)
130828TL	275mm (10.83in)
130828TM	270mm (10.63in)
130828TN	265mm (10.43in)
130828TP	260mm (10.24in)
130828TQ	255mm (10.04in)
130828TR	250mm (9.84in)
130828TS	245mm (9.65in)
130828TT	240mm (9.45in)
130828TU	235mm (9.25in)
130828TV	230mm (9.06in)
130828TW	225mm (8.86in)
130828TX	220mm (8.66in)
130828TY	215mm (8.46in)
130828TZ	210mm (8.27in)
130828UA	205mm (8.07in)
130828UB	200mm (7.87in)
130828UC	195mm (7.68in)
130828UD	190mm (7.48in)

3450 RPM		
Model No.	Rotor Kit Part No.	Stator / Motor Housing Kit Part No.
— SH — — 75N2	131966	132042
— SH — — 7552	131967	132043
— SH — — 100N2	131968	132044
— SH — — 10052	131969	132045
— SH — — 150N2	131970	132046
— SH — — 15052	131971	132047
— SH — — 20082	131972	132048
— SH — — 20052	131973	132049
— SH — — 25042	131974	132050
— SH — — 25052	131975	132051
— SH — — 30042	131976	132052
— SH — — 30052	131977	132053

1750 RPM		
Model No.	Rotor Kit Part No.	Stator / Motor Housing Kit Part No.
— SH — — 75N4	131986	132062
— SH — — 7554	131987	132063
— SH — — 100N4	131988	132064
— SH — — 10054	131989	132065
— SH — — 150N4	131990	132066
— SH — — 15054	131991	132067
— SH — — 20084	131992	132068
— SH — — 20054	131993	132069
— SH — — 25044	131994	132070
— SH — — 25054	131995	132071
— SH — — 30044	131996	132072
— SH — — 30054	131997	132073

1150 RPM		
Model No.	Rotor Kit Part No.	Stator / Motor Housing Kit Part No.
— SH — — 75N6	132915	132933
— SH — — 7556	132916	132934
— SH — — 100N6	132917	132935
— SH — — 10056	132918	132936
— SH — — 150N6	132919	132937
— SH — — 15056	132920	132938
— SH — — 20046	132921	132939
— SH — — 20056	132922	132940

Example		
Model No.	Rotor Kit Part No.	Stator / Motor Housing Kit Part No.
4SHVB25052	131975	132051

Rotor Kit includes:

- Rotor/Shaft Assembly
- Bearing Retainer
- Ball Bearing, 2x
- Washer, Springer, Wavy
- Socket Screws, FHCS
- Retaining Ring, EXT
- Pipe Plugs
- O-Rings
- Screws, SHCS

Stator/Motor Housing Kit includes:

- Motor Housing, Lower
- Stator
- Socket Screws, FHCS
- Pipe Plugs
- O-Rings
- Screws, SHCS

Notes

Notes

BARNES®

Limited 5 Year Warranty

Municipal Wastewater

Crane Pumps & Systems offers a Commercial Warranty covering parts and labor on its pumps to this original end purchaser, when used in permanent installations in compliance with requirements of the Barnes Catalog and Technical Manual specifications for pumping municipal wasterwater or similar abrasive free, non corrosive liquids against defects in workmanship and material for the period as defined below.

In the event that the pump is provided with moisture and/or temperature sensors, these must be in use in order to validate this warranty. Barnes SH series Non-Clogs, SE series Non-Clogs, Wet End of XSE series Non-Clogs (Motor has a one (1) year warranty and is the sole responsibilty of Reliance Electric), Effluent and Sump pump models are Warranted for sixty (60) months (or 10,000 hours of operation) from the date of manufacture from Crane Pumps & Systems to the End Purchaser as follows: Crane Pumps & Systems will pay the following share of the cost of replacement parts and labor provided the pump, with cable attached, is returned prepaid to an Authorized Service Station as decided by Crane Pumps & Systems and its Municipal Market Distributor.

Warranty Period *

Time After Manufacture (months):	0 - 18	19 -39	40 -60
Run Time (hours):	0 - 3,000	3,001 - 6,500	6,501 - 10,000
Warranty:	100%	50%	25%

* Time After Manufacture (months) or Run Time (hours) shall be determined by an Authorized Service Station and/or current copy of maintenance. If run time documentation cannot be produced then date of manufacture prevails.

Start-up reports and electrical system schematics (including Bills-of-Material) may be required to support any Warranty claims. This Warranty shall not apply to any product or part of product which has been subject to misuses, negligence, accident, operation outside of our published hydraulic curve parameters, used in a manner contrary to printed Instructions, or damaged due to a defective power supply, improper electrical protection, excessive abrasive wear or faulty installation or repair. **THE SOLE AND EXCLUSIVE REMEDY FOR BREACH OF ANY AND ALL WARRANTIES WITH RESPECT TO ANY PRODUCT SHALL BE TO REPLACE OR REPAIR AT OUR ELECTION, F.O.B. POINT OF MANUFACTURE OR AUTHORIZED REPAIR STATION, SUCH PRODUCTS AND/OR PARTS AS PROVEN DEFECTIVE. THERE SHALL BE NO FURTHER LIABILITY, WHETHER BASED ON WARRANTY, NEGLIGENCE OR OTHERWISE.**

Crane Pumps & Systems neither assumes nor authorizes any person or company to assume for it, any other obligation in correction with the sale of its equipment. Any enlargement or modification of this Warranty by a Representative or other Selling Agent shall become HIS or HER exclusive responsiblity.
UNDER NO CIRCUMSTANCES WILL WE BE RESPONSIBLE FOR ANY OTHER DIRECT OR CONSEQUENTIAL DAMAGES, INCLUDING BUT NOT LIMITED TO TRAVEL EXPENSES, RENTED EQUIPMENT, OUTSIDE CONTRACTOR FEES, UNAUTHORIZED REPAIR SHOP EXPENSES, LOST PROFITS, LOST INCOME, LABOR CHARGES, DELAYS IN PRODUCTION, IDLE PRODUCTION, WHICH DAMAGES ARE CAUSED BY ANY DEFECTS IN MATERIAL AND\OR WORKMANSHIP AND\OR DAMAGE OR DELAYS IN SHIPMENT. THIS WARRANTY IS EXPRESSLY IN LIEU OF ANY OTHER EXPRESS OR IMPLIED WARRANTY, INCLUDING ANY WARRANTY OF MERCHANTABILITY OR FITNESS FOR A PARTICULAR PURPOSE.

The following information must be completed to validate warranty. (Certain data will be provided before order placement and additional data following shipment).

Pump Model/Serial #: _____ Job Name: _____
Sales Order #: _____ Date: _____

Factory Authorized Signature: _____ Title: _____

CRANE®

PUMPS & SYSTEMS

A Crane Co. Company

420 Third Street
Piqua, Ohio 45356
Phone: (937) 778-8947
Fax: (937) 773-7157
www.cranepumps.com

83 West Drive, Bramton
Ontario, Canada L6T 2J6
Phone: (905) 457-6223
Fax: (905) 457-2650

IMPORTANT!
WARRANTY REGISTRATION

Your product is covered by the enclosed Warranty.
To complete the Warranty Registration Form go to:

http://www.cranepumps.com/ProductRegistration/

If you have a claim under the provision of the warranty, contact your local Crane Pumps & Systems, Inc. Distributor.

RETURNED GOODS
RETURN OF MERCHANDISE REQUIRES A "RETURNED GOODS AUTHORIZATION".
CONTACT YOUR LOCAL CRANE PUMPS & SYSTEMS, INC. DISTRIBUTOR.

Products Returned <u>Must</u> Be Cleaned, Sanitized, Or Decontaminated As Necessary Prior To Shipment, To Insure That Employees Will Not Be Exposed To Health Hazards In Handling Said Material. All Applicable Laws And Regulations Shall Apply.

CRANE®

A Crane Co. Company

PUMPS & SYSTEMS

START-UP REPORT

General Information

Pump Owner's Name: _____

Address: _____

Location of Installation: _____

Contact Person: _____ Phone: _____

Purchased From: _____

Nameplate Data

Pump Model #: _____ Serial #: _____

Part #: _____ Impeller Diameter: _____

Voltage: _____ Phase: _____ Ø Hertz: _____ Horsepower: _____

Full Load Amps: _____ Service Factor Amps: _____

Motor Manufacturer: _____

Controls

Control panel manufacturer: _____

Model/Part number: _____

Number of pumps operated by control panel: _____

Short circuit protection? YES___ NO___ Type: _____

Number and size of short circuit device(s): _____ Amp rating: _____

Overload Type: _____ Size: _____ Amp rating: _____

Do protection devices comply with pump and motor Amp rating? YES___ NO___

Are all electrical and panel entry connections tight? YES___ NO___

Is the interior of the panel dry? YES___ NO___

Liquid level Control Brand and Model: _____

Pre-Startup

All Pumps

Type of equipment: NEW___ REBUILT___ USED___

Condition of equipment at Start-Up: DRY___ WET___ MUDDY___

Was Equipment Stored? YES___ NO___ Length of Storage: _____

Liquid being pumped: _____ Liquid Temperature: _____

Supply Voltage/Phase/Frequency matches nameplate? YES___ NO___

Shaft turns freely? YES___ NO___

Direction of rotation verified for 3Ø motors? YES___ NO___

Debris in piping or wet well? YES___ NO___

Debris removed in your presence? YES___ NO___

Pump case/wet well filled with liquid before startup? YES___ NO___

Is piping properly supported? YES___ NO___

Non-Submersible Pumps

Is base plate properly installed / grouted? YES___ NO___ N/A___

Coupling Alignment Verified per I&O Manual? YES___ NO___ N/A___

Grease Cup/Oil Reservoir Level checked? YES___ NO___ N/A___

Submersible Pumps

Resistance of cable and pump motor (measured at pump control):

Red-Black:_____Ohms(Ω) Red-White:_____Ohms(Ω) White-Black:_____Ohms(Ω)

Resistance of Ground Circuit between Control Panel and outside of pump:_____Ohms(Ω)

MEG Ohms check of insulation:

Red to Ground: _____ White to Ground: _____ Black to Ground: _____

Operational Checks

Is there noise or vibration present? YES___ NO___ Source of noise/vibration: _____

Does check valve operate properly? YES___ NO___ N/A___

Is system free of leaks? YES___ NO___ Leaks at: _____

Does system appear to operate at design flow rate? YES___ NO___

Nominal Voltage: _____Phase: 1Ø 3Ø (select one)

Voltage Reading at panel connection, Pump OFF: L1, L2 _____ L2, L3 ____ L1, L3 _____

Voltage Reading at panel connection, Pump ON: L1, L2 _____ L2, L3 ____ L1, L3 _____

Amperage Draw, Pump ON: L1 _____ L2 _____ L3 _____

Submersible Pumps

Are BAF and guide rails level / plumb? YES___ NO___

Is pump seated on discharge properly? YES___ NO___

Are level controls installed away from turbulence? YES___ NO___

Is level control operating properly? YES___ NO___

Is pump fully submerged during operation? YES___ NO___

Follow up/Corrective Action Required

YES___ NO___

Additional Comments:

_____

_____

_____

_____

_____

_____

_____

Startup performed by: _____ Date: _____

Present at Start-Up

( ) Engineer: _____ ( ) Operator: _____

( ) Contactor:_____ ( ) Other:_____

All parties should retain a copy of this report for future trouble shooting/reference

CRANE®

A Crane Co. Company

PUMPS & SYSTEMS

420 Third Street
Piqua, Ohio 45356
Phone: (937) 778-8947
Fax: (937) 773-7157
www.cranepumps.com

83 West Drive, Brampton
Ontario, Canada L6T 2J6
Phone: (905) 457-6223
Fax: (905) 457-2650